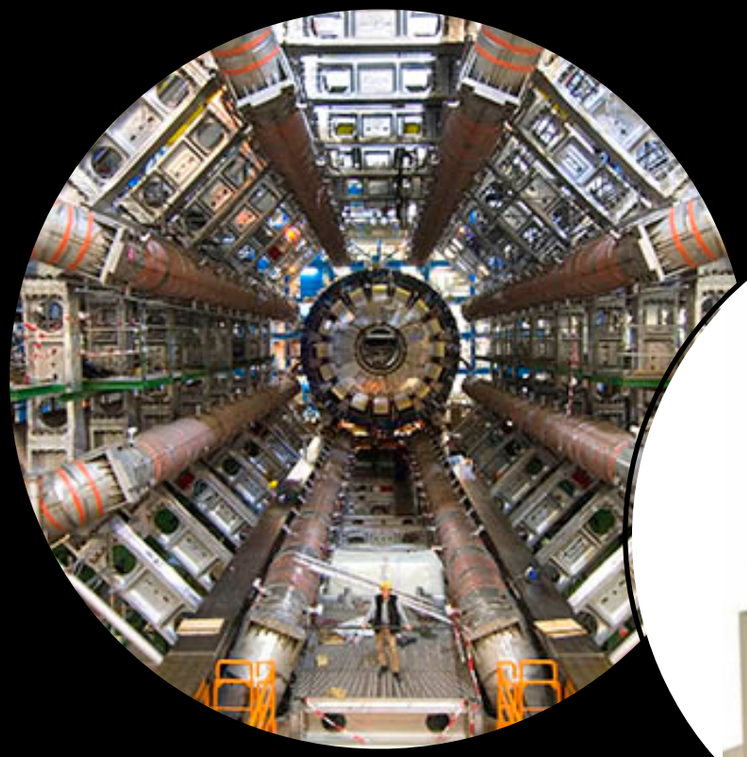

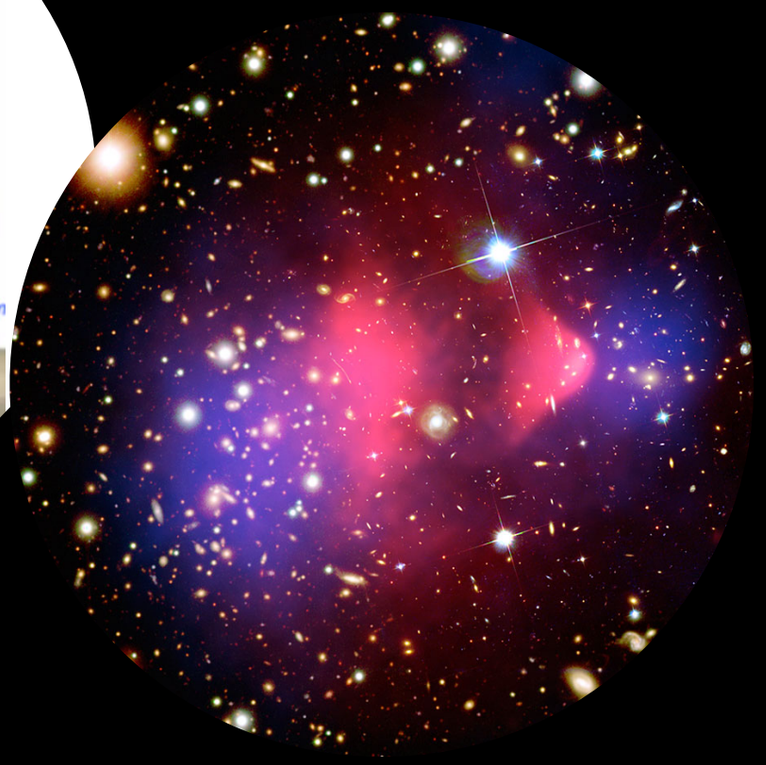

ANUBIS

AN Underground **B**elayed **I**n-**S**haft search experiment

Giulio Aielli • Martin Bauer • Oleg Brandt • Lawrence Lee •
Christian Ohm • Bálint Szepfalvi

Birmingham Particle Physics Seminar, 9/12/2020

Why long-lived particles?

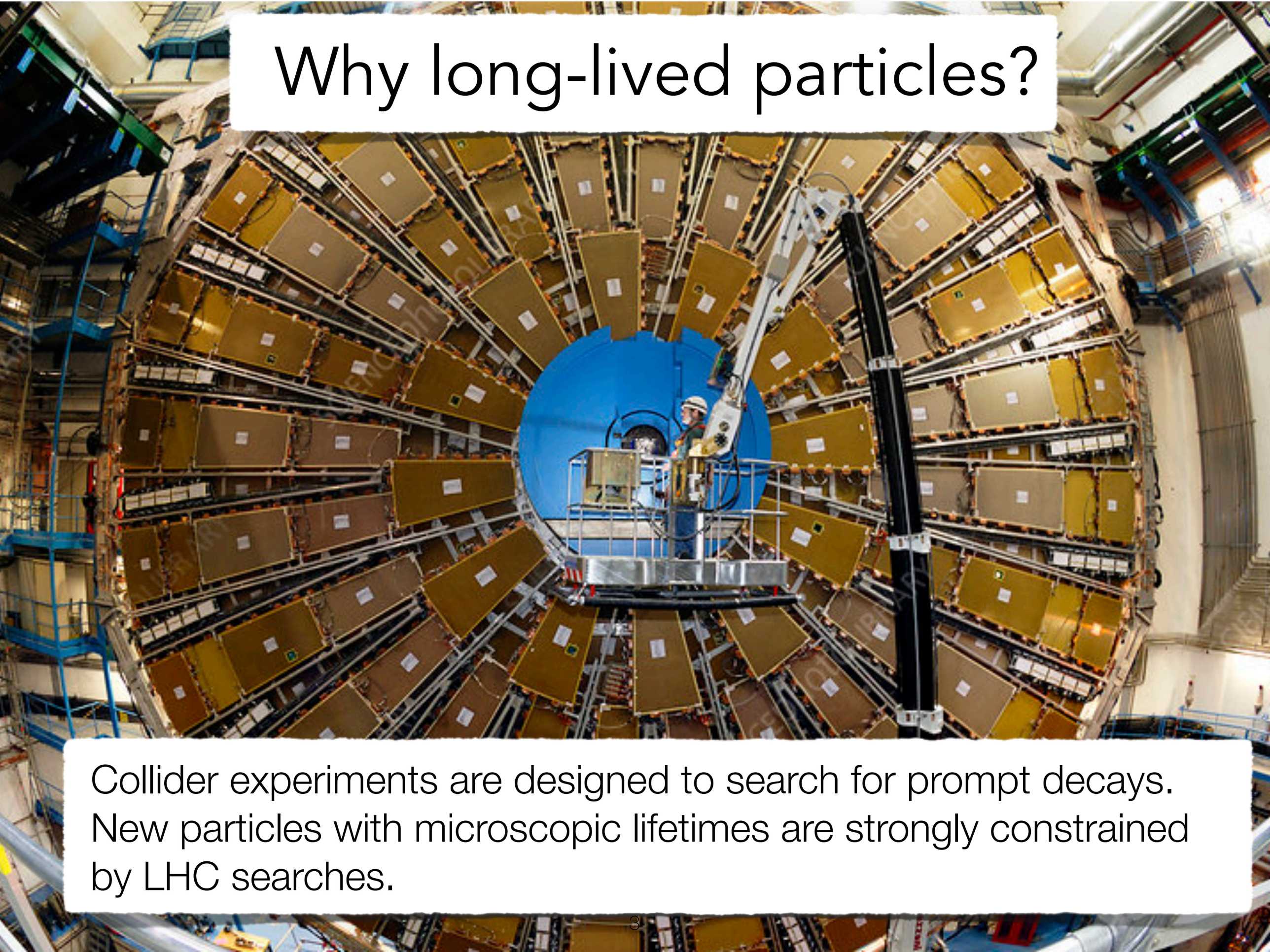

Collider experiments are designed to search for prompt decays. New particles with microscopic lifetimes are strongly constrained by LHC searches.

Why long-lived particles?

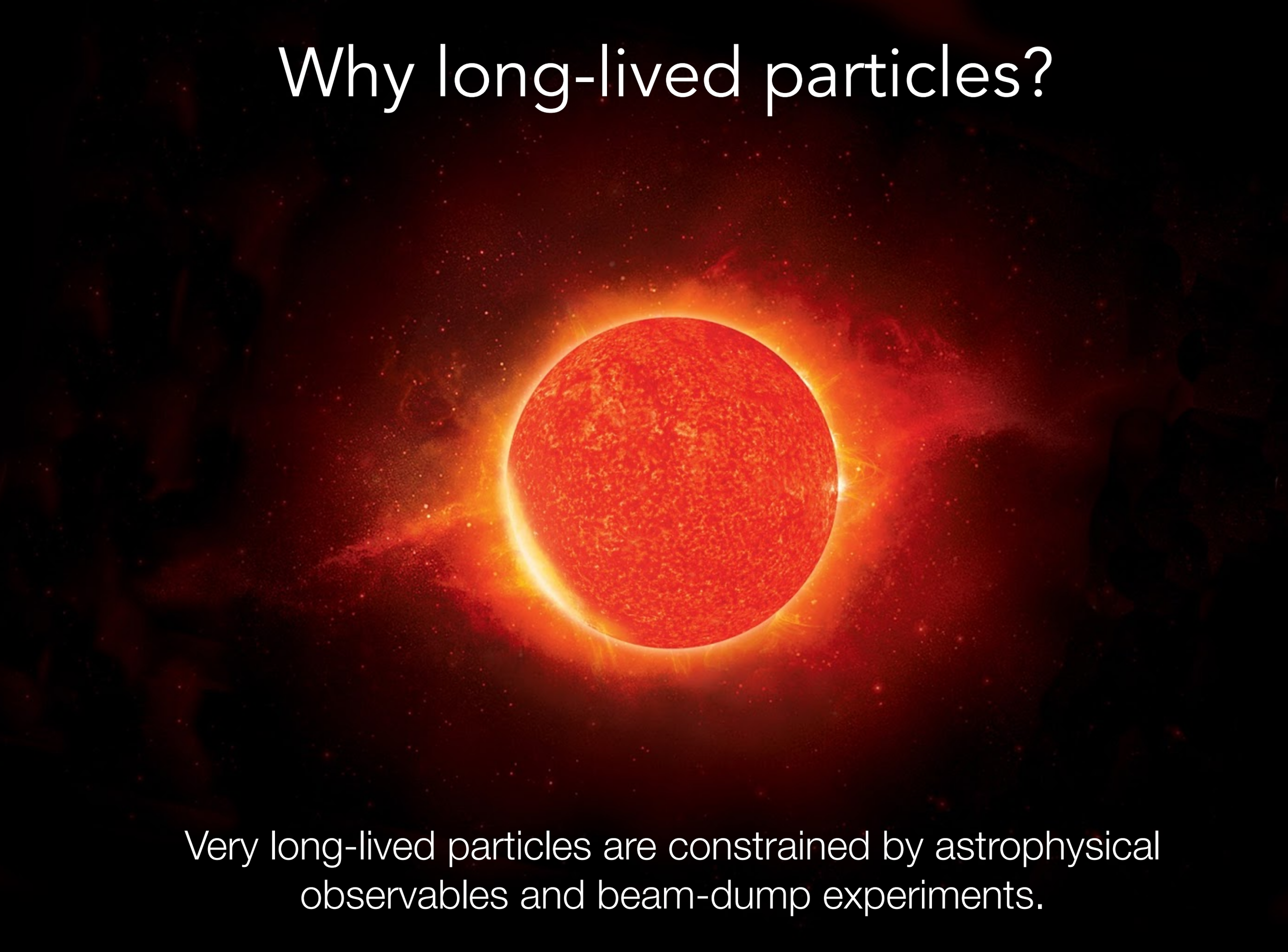

Very long-lived particles are constrained by astrophysical observables and beam-dump experiments.

Why long-lived particles?

For particles with “intermediate lifetimes” there exists a sensitivity gap

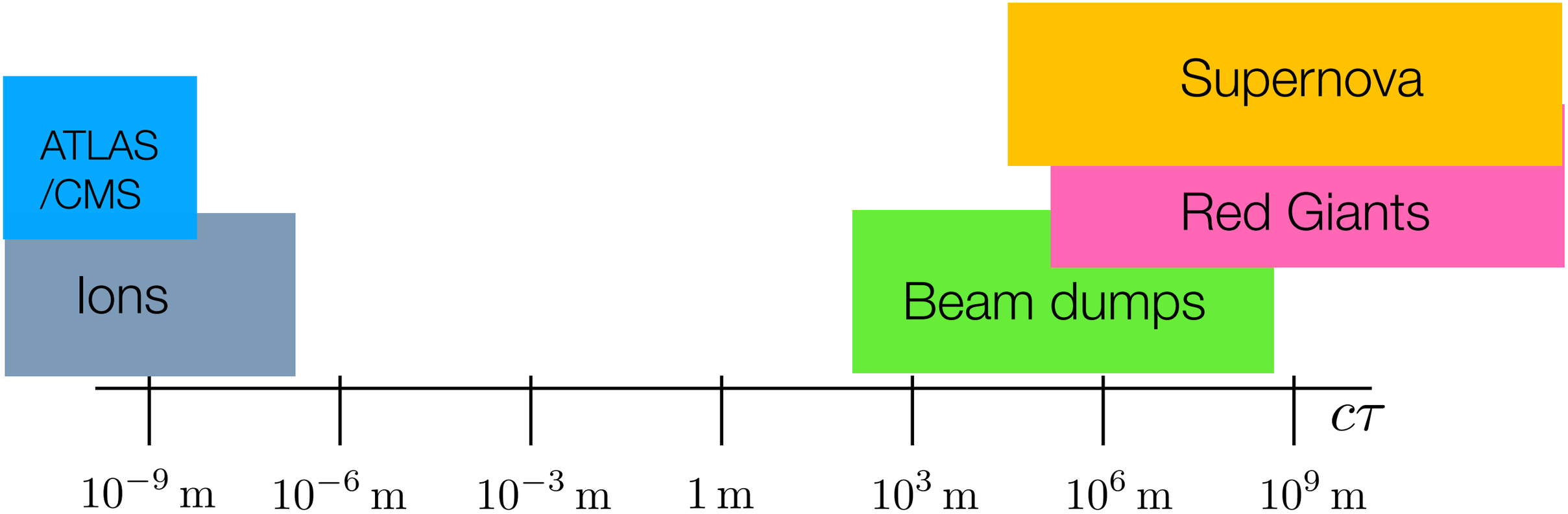

Constrains new Physics with sizeable interactions with the SM

Constrains new Physics with no (tiny) interactions with the SM (almost stable)

Why long-lived particles?

This is not a small class of exotic theories. Muons are “collider-stable” (as is the K_L, n).

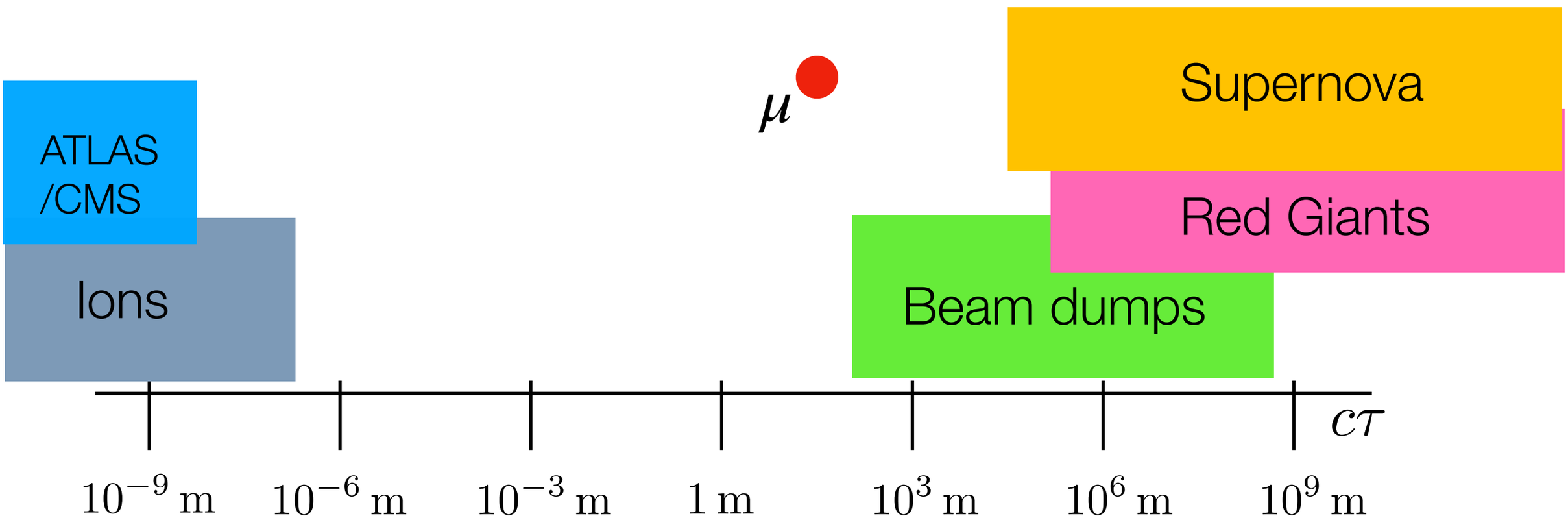

Constrains new Physics with sizeable interactions with the SM

Constrains new Physics with no (tiny) interactions with the SM (almost stable)

Where to look for long-lived particles?

There are two different search strategies:

- Search for very weakly coupled *light particles* with high statistics
- Search for particles in the decays of *heavy states* (the Higgs, new heavy mediators)

With respect to the LHC, this corresponds to two different measurement regions:

- Measurements *along* the beam line (“on-axis”)
- Measurements *orthogonal* to the beam line (“off-axis”)

Where to look for long-lived particles?

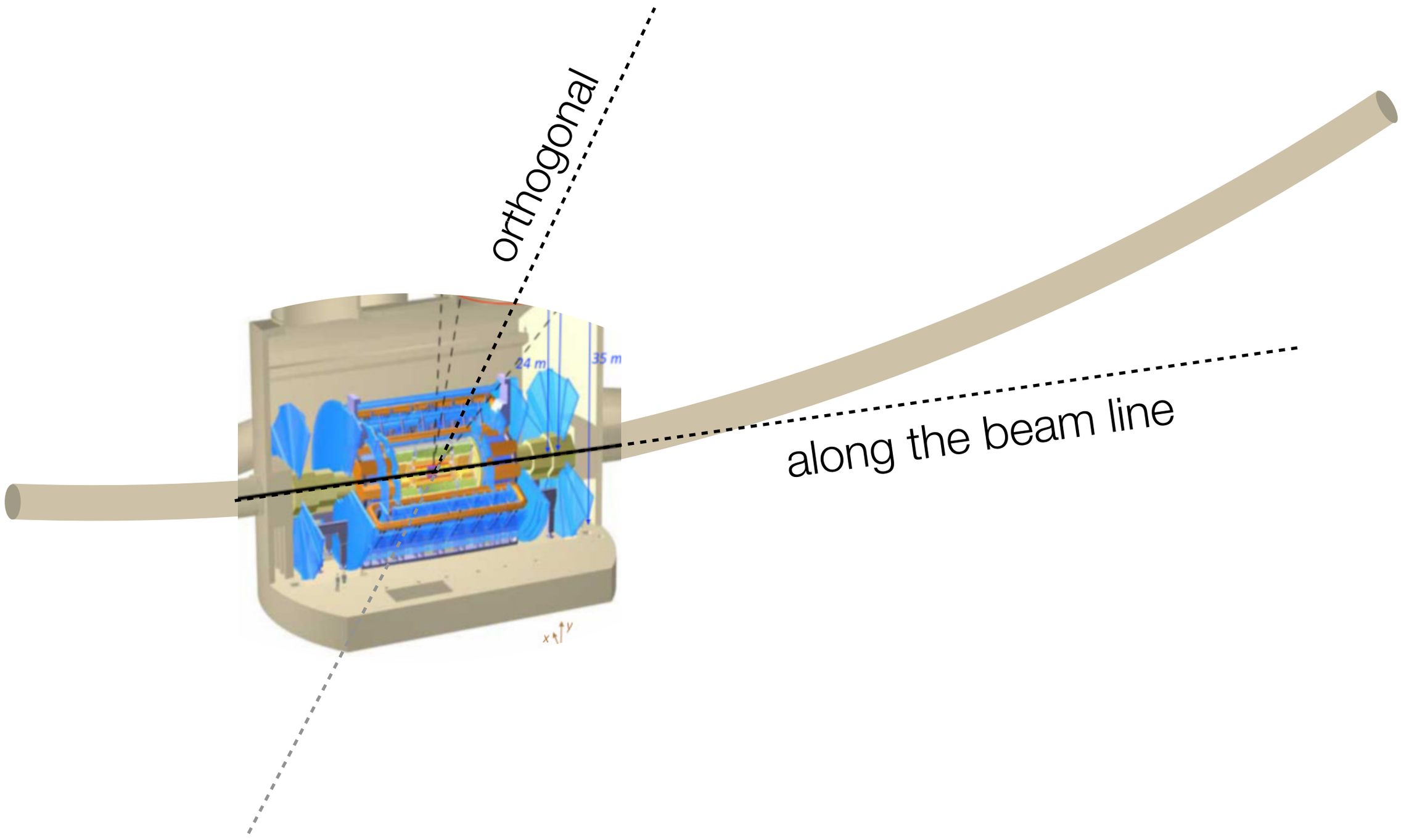

Where to look for long-lived particles?

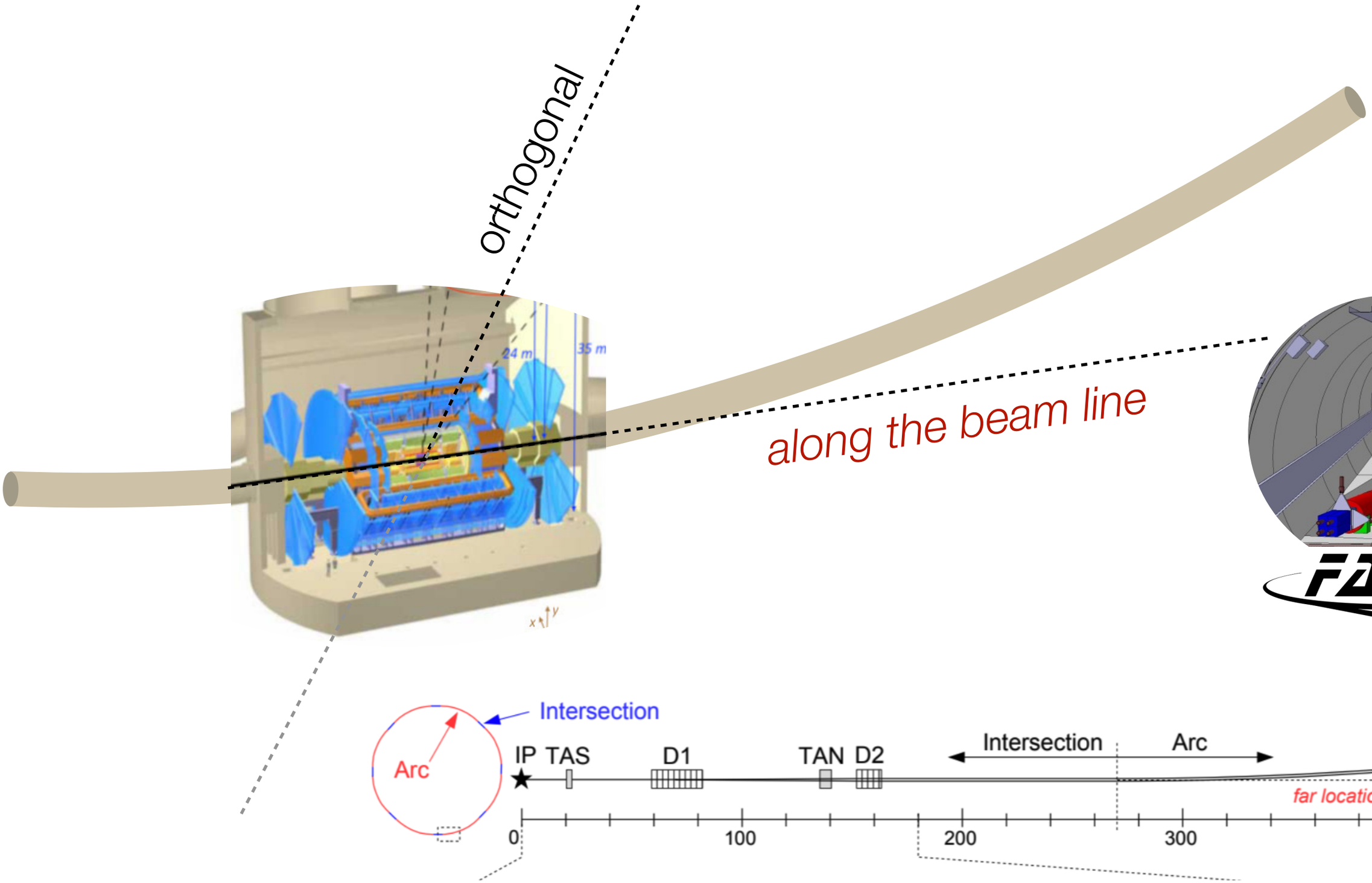

Where to look for long-lived particles?

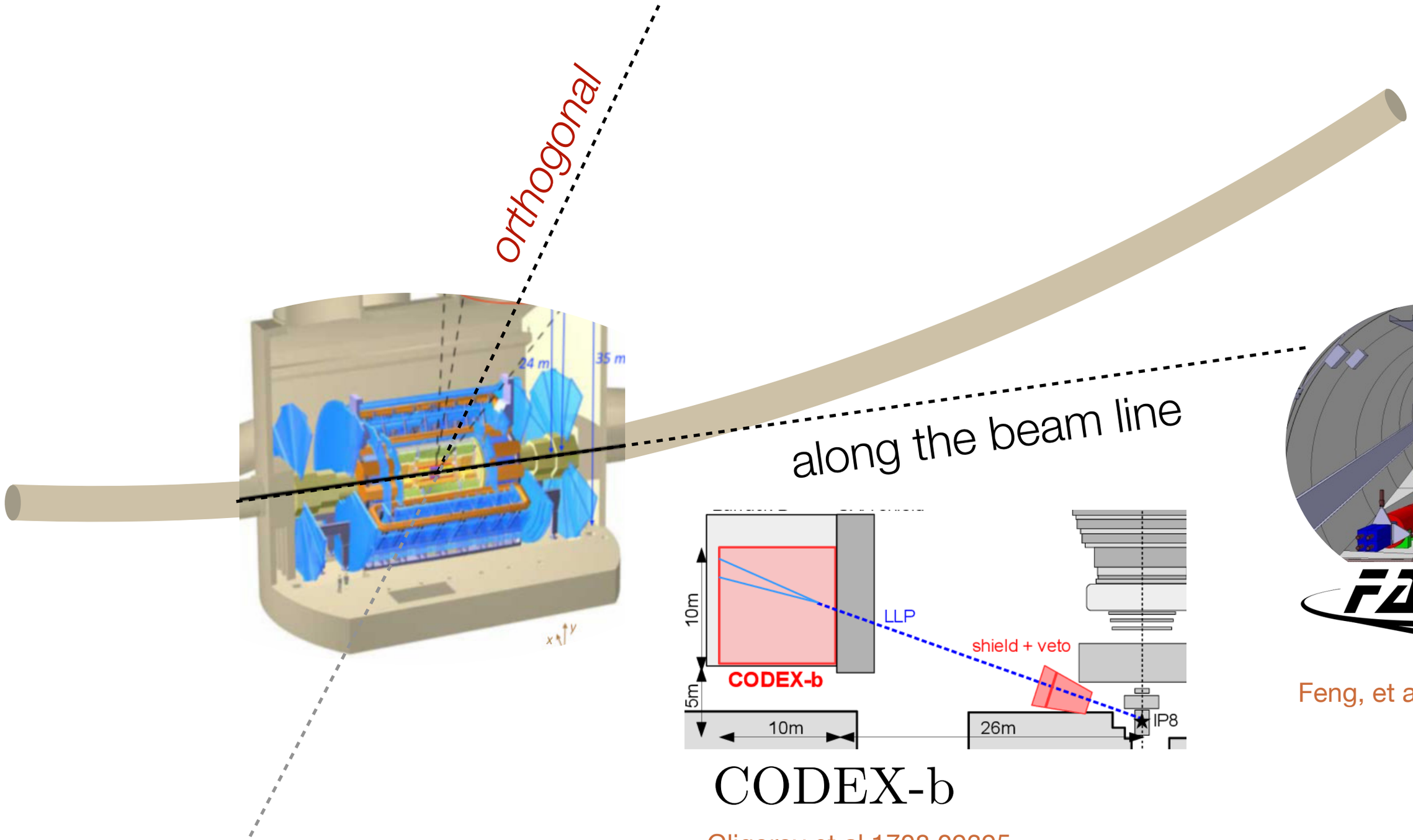

CODEX-b

Gligorov et al 1708.09395

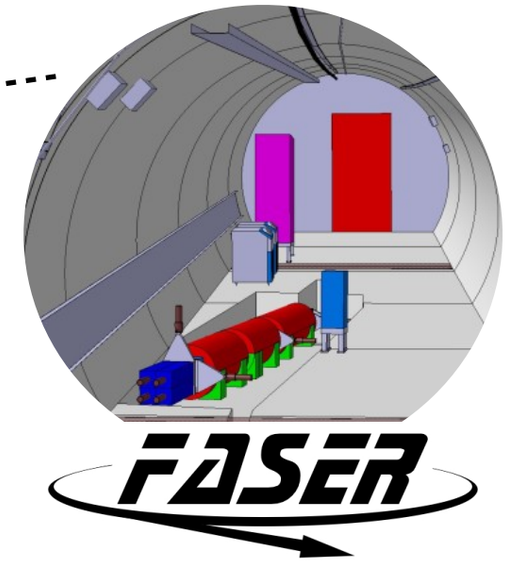

Feng, et al 1710.09387

Where to look for long-lived particles?

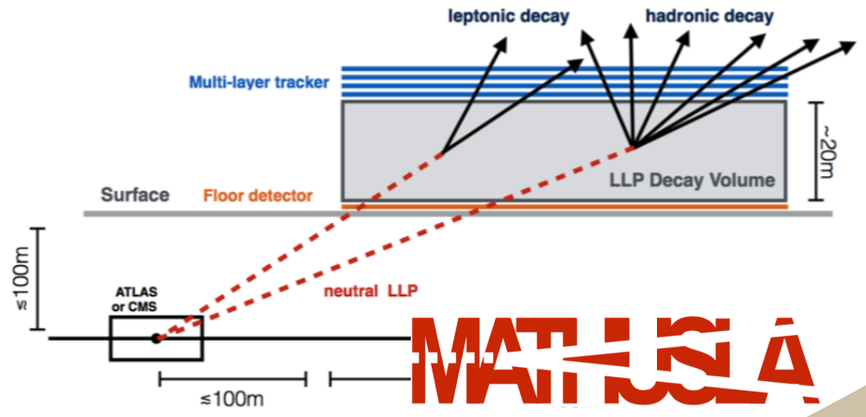

Chou et al 1606.06298

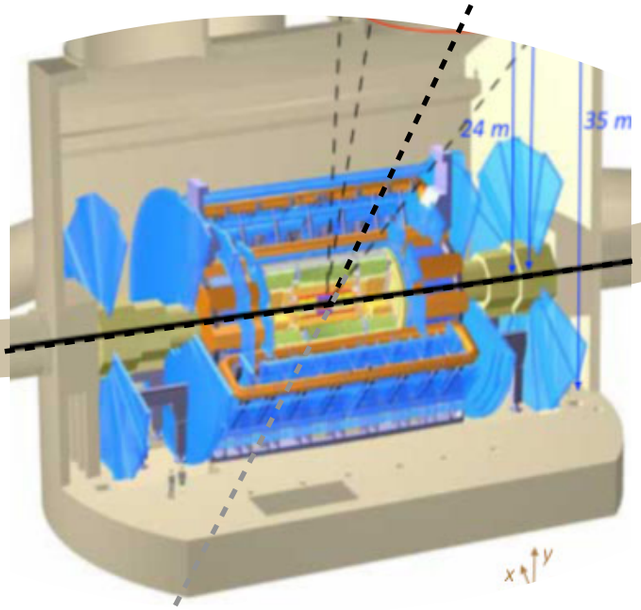

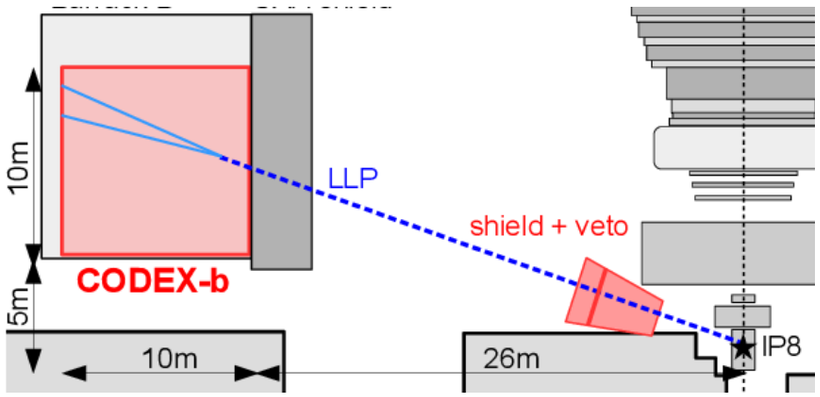

CODEX-b

Gligorov et al 1708.09395

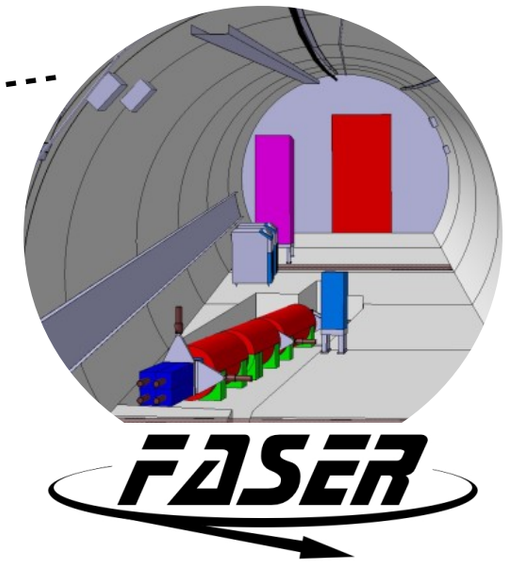

Feng, et al 1710.09387

Where to look for long-lived particles?

ANUBIS

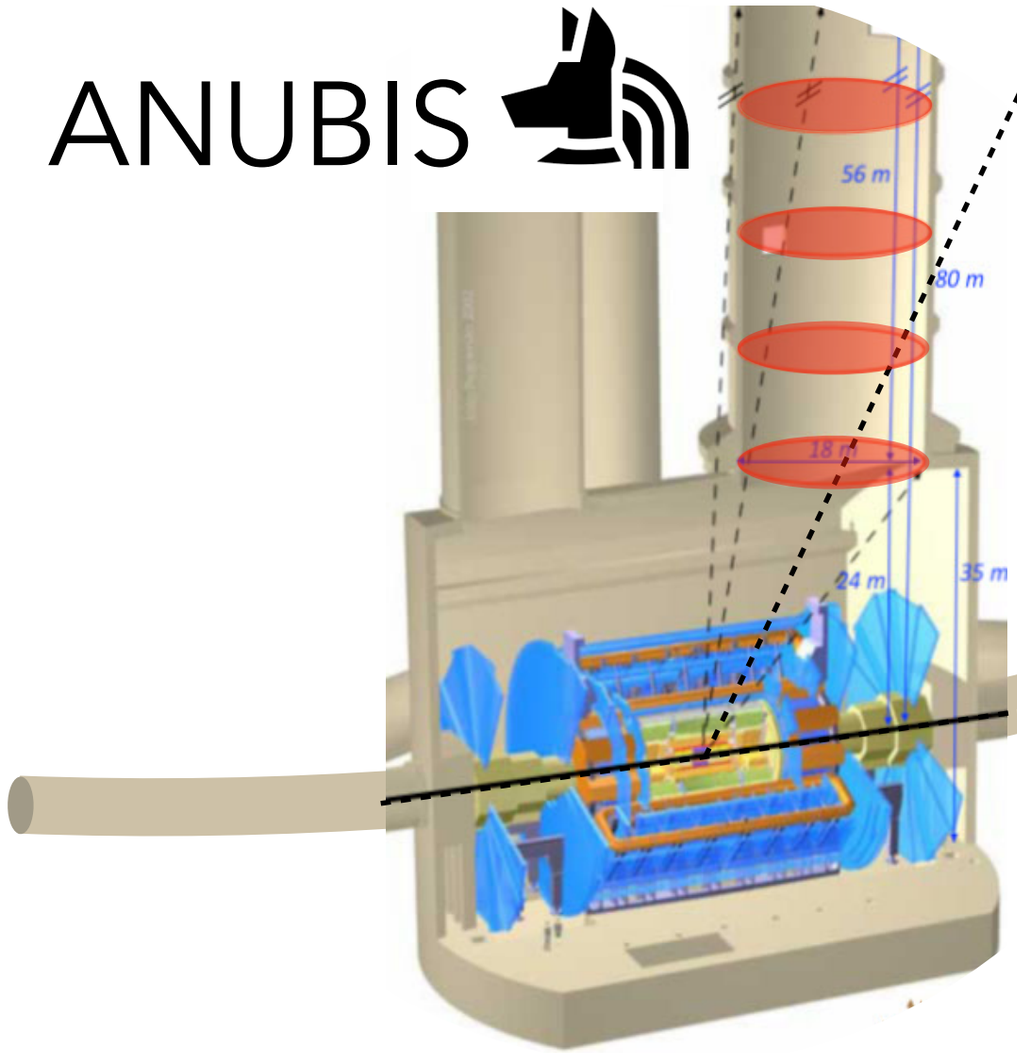

We propose to instrument the ATLAS service shaft

Bauer, OB, Lee, Ohm 1909.13022

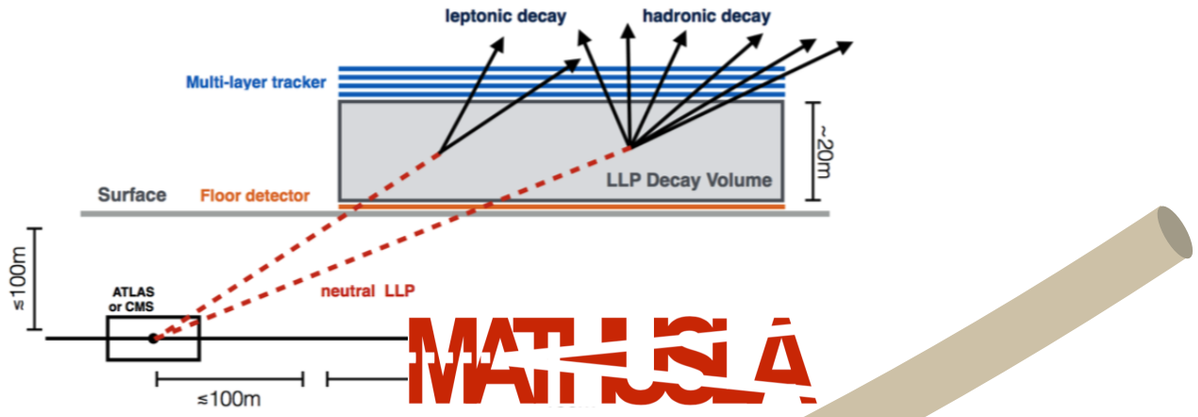

Chou et al 1606.06298

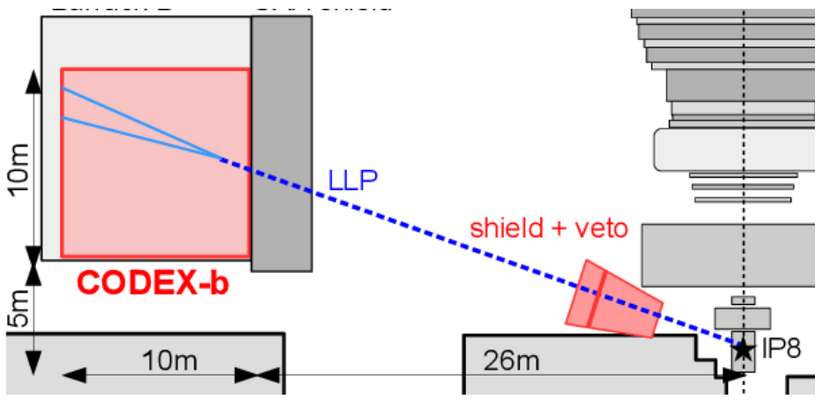

CODEX-b

Gligorov et al 1708.09395

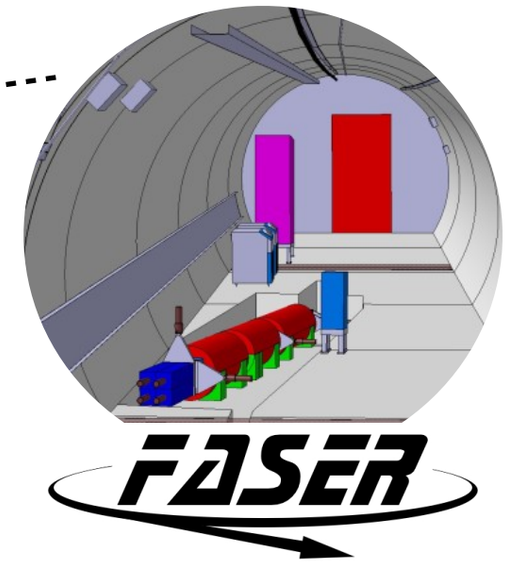

Feng, et al 1710.09387

ANUBIS: idea

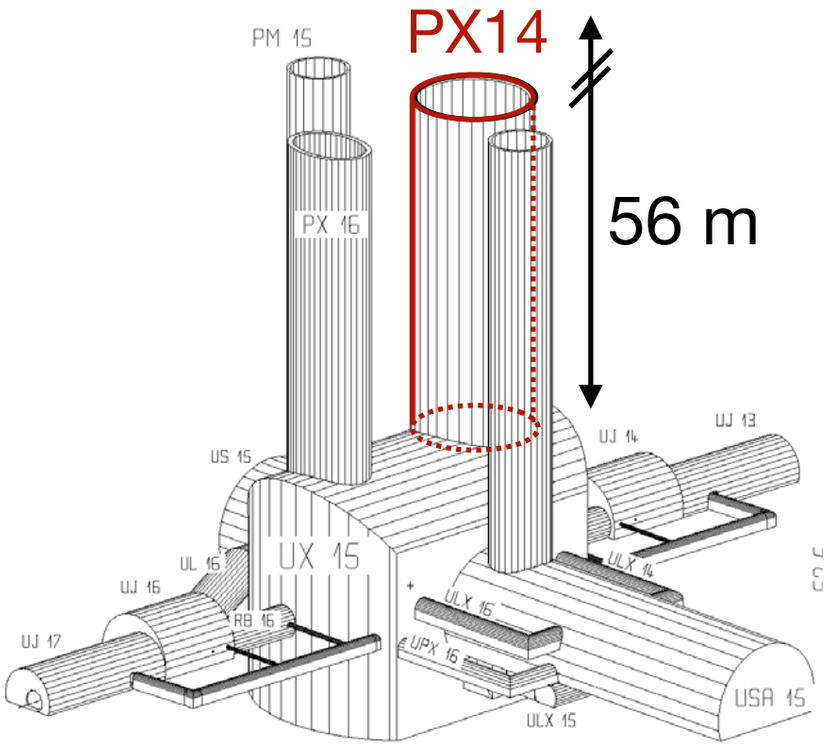

cranes can support up to 270 t

- Existing geometry allows for minimal civil engineering costs
- Projective decay volume optimises acceptance for different lifetimes

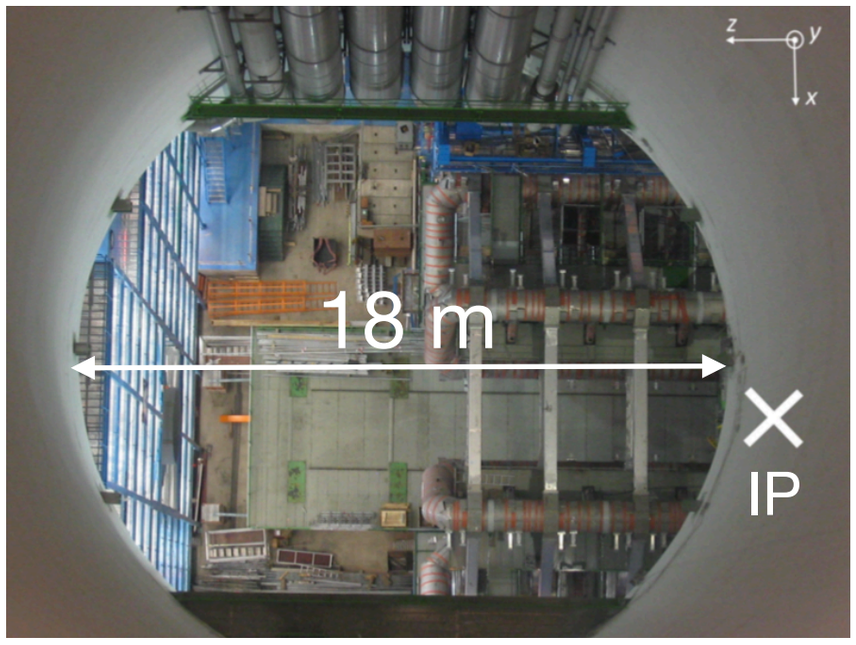

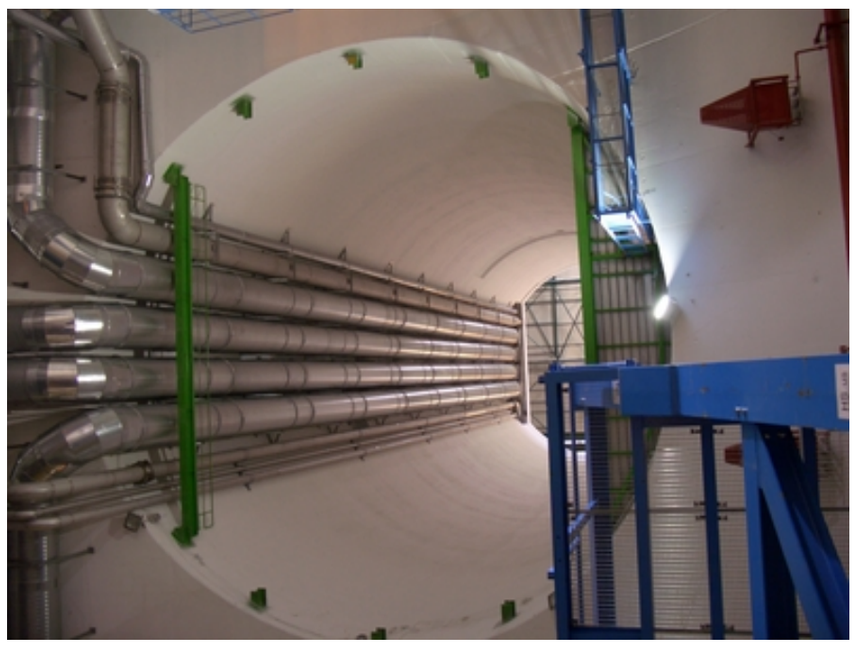

ANUBIS: idea

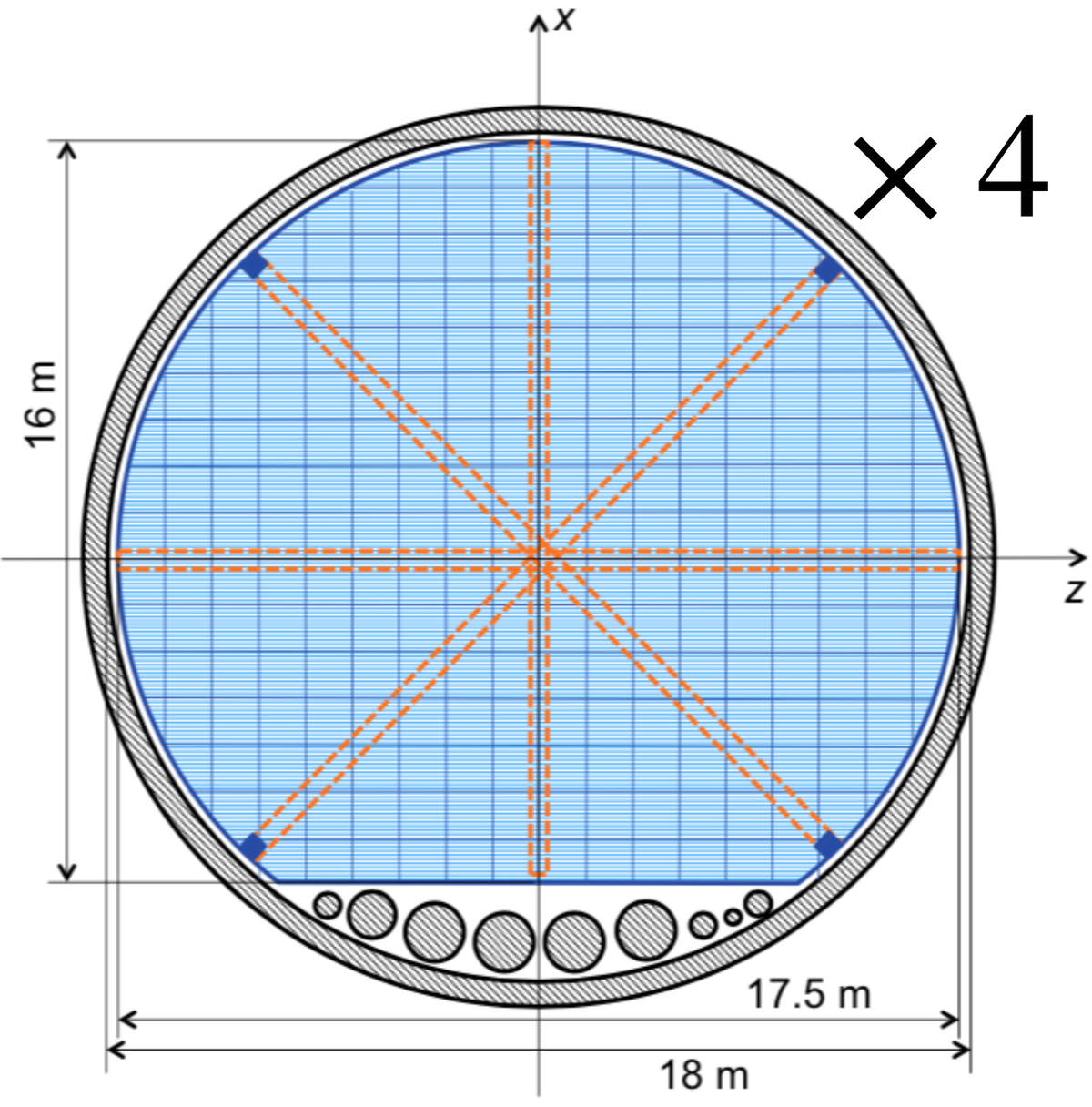

× 4

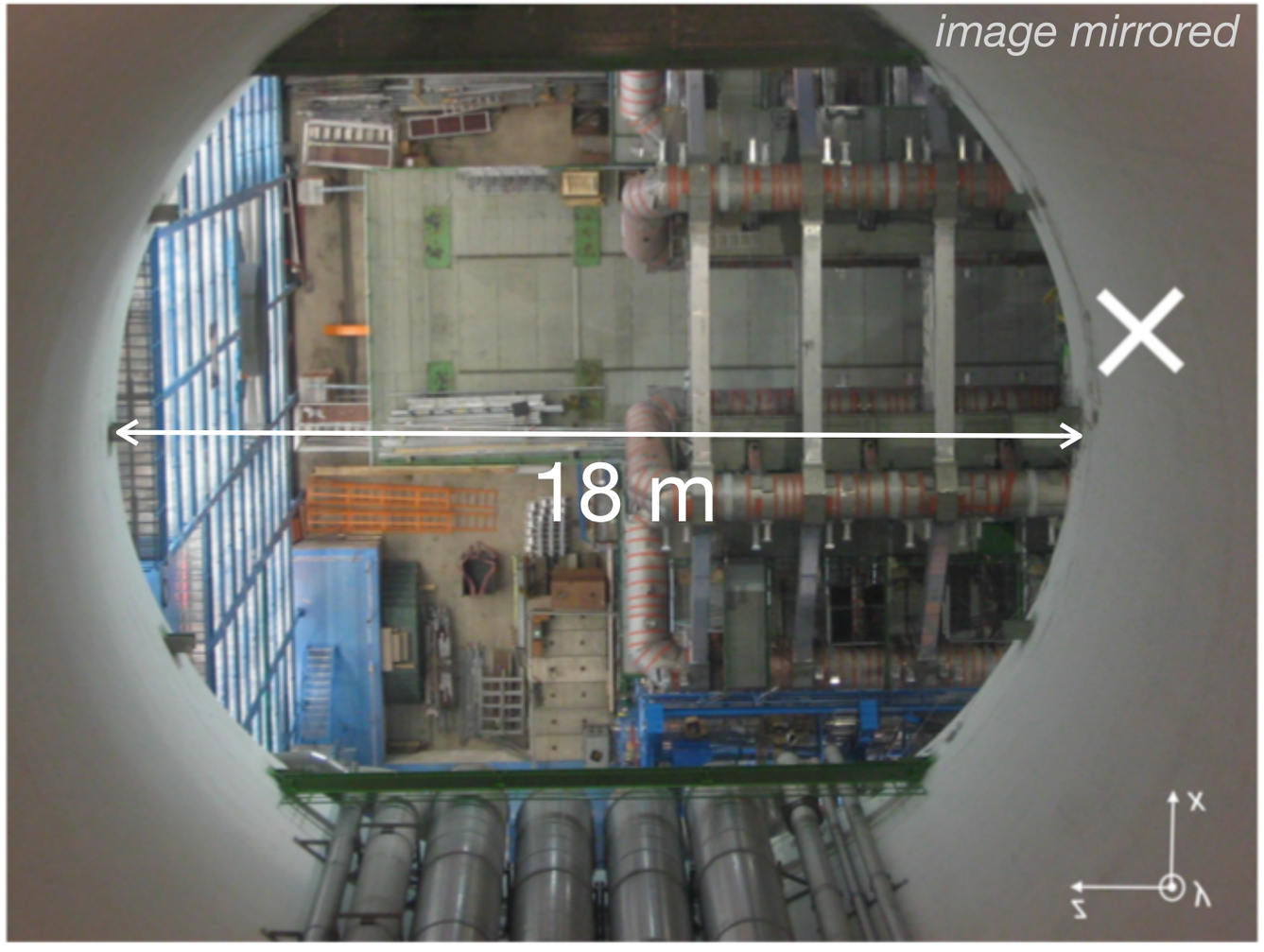

Current proposal:
Four evenly spaced tracking stations with
a cross-sectional area of 230 m^2 each

ANUBIS: detector concept

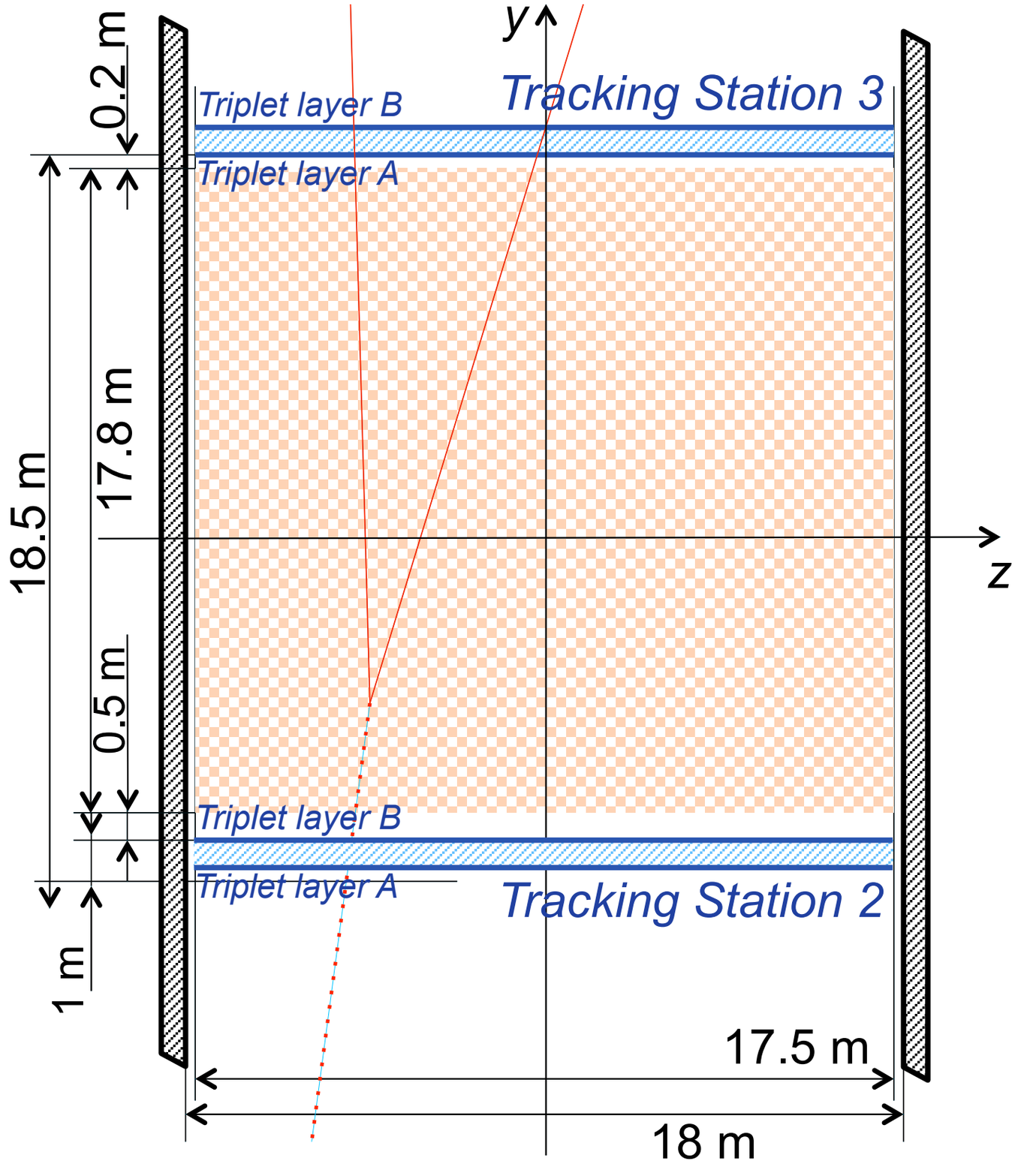

Parameter	Specification
Time resolution	$\delta t \lesssim 0.5$ ns
Angular resolution	$\delta\alpha \lesssim 0.01$ rad
Spatial resolution	$\delta x, \delta z \lesssim 0.5$ cm
Per-layer hit efficiency	$\varepsilon \gtrsim 98\%$

ANUBIS: detector concept

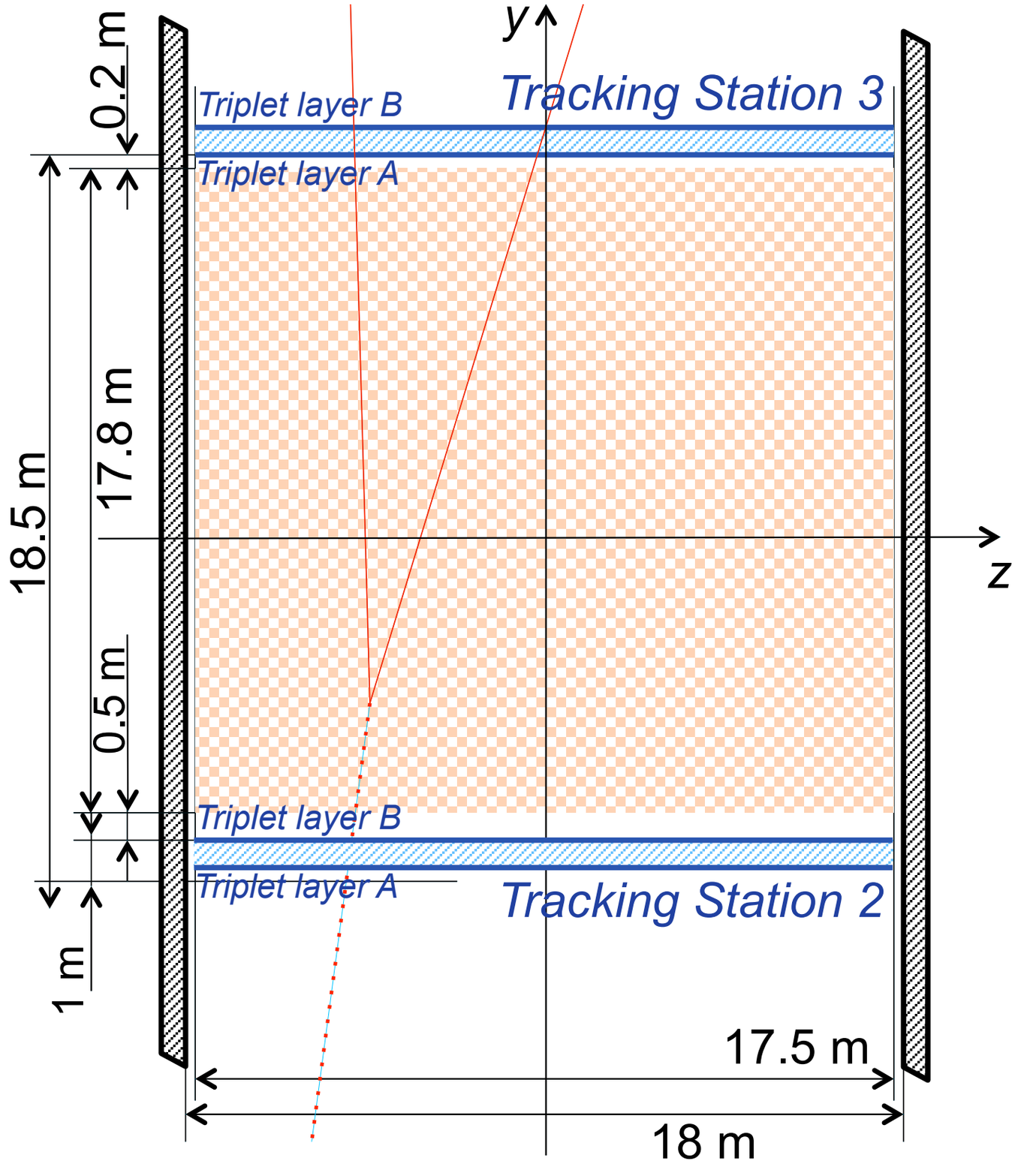

Parameter	Specification
Time resolution	$\delta t \lesssim 0.5$ ns
Angular resolution	$\delta\alpha \lesssim 0.01$ rad
Spatial resolution	$\delta x, \delta z \lesssim 0.5$ cm
Per-layer hit efficiency	$\varepsilon \gtrsim 98\%$

Timing:

- Fiducialise volume:
  $\delta y_{\mathrm{DV}} \approx 15$ cm
- Eliminate backgrounds
  e.g. cosmics, non-collision
- measure β

ANUBIS: detector concept

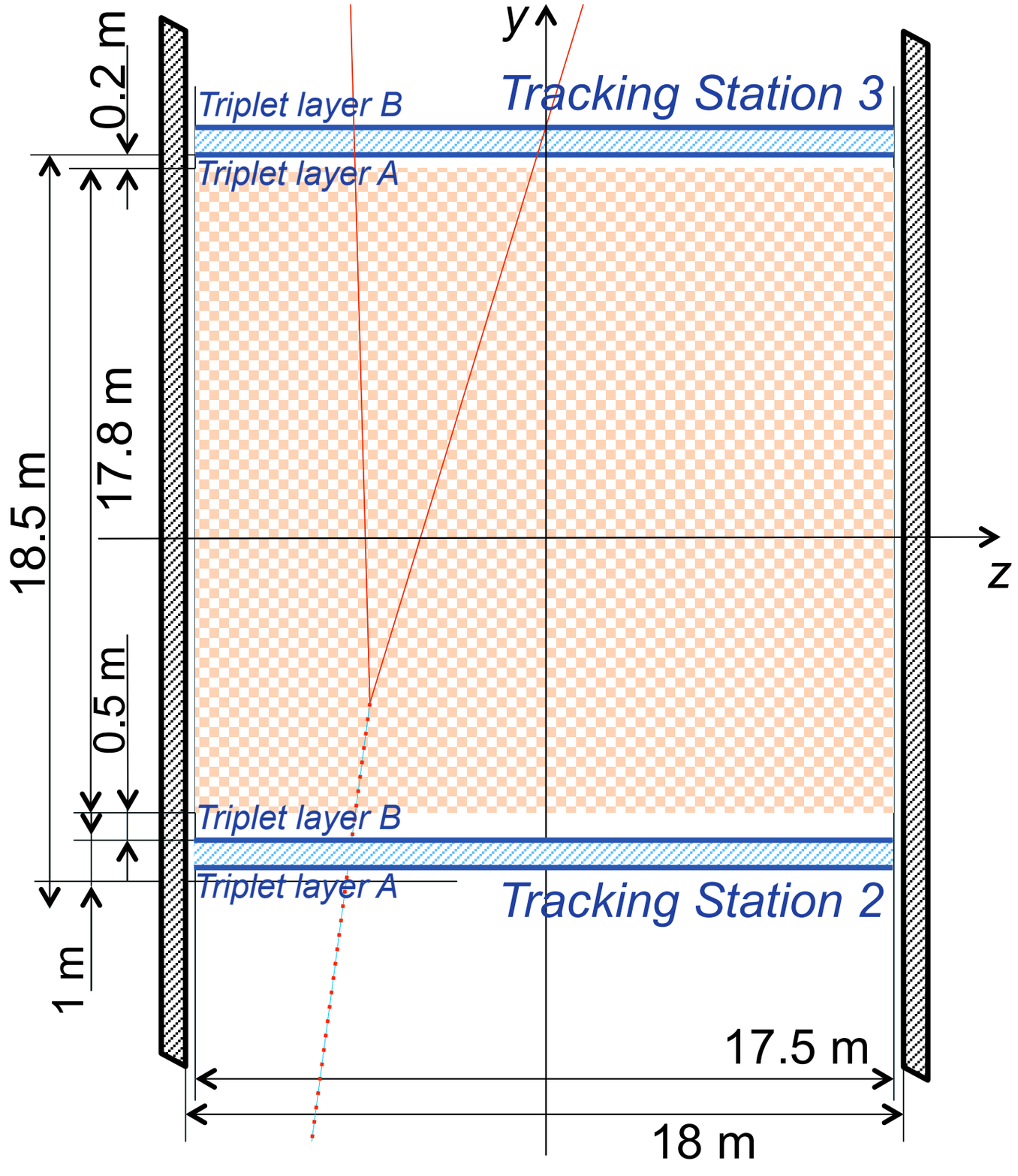

Parameter	Specification
Time resolution	$\delta t \lesssim 0.5$ ns
Angular resolution	$\delta\alpha \lesssim 0.01$ rad
Spatial resolution	$\delta x, \delta z \lesssim 0.5$ cm
Per-layer hit efficiency	$\varepsilon \gtrsim 98\%$

Efficiency:

- Detect signal
- Reject backgrounds

ANUBIS: detector concept

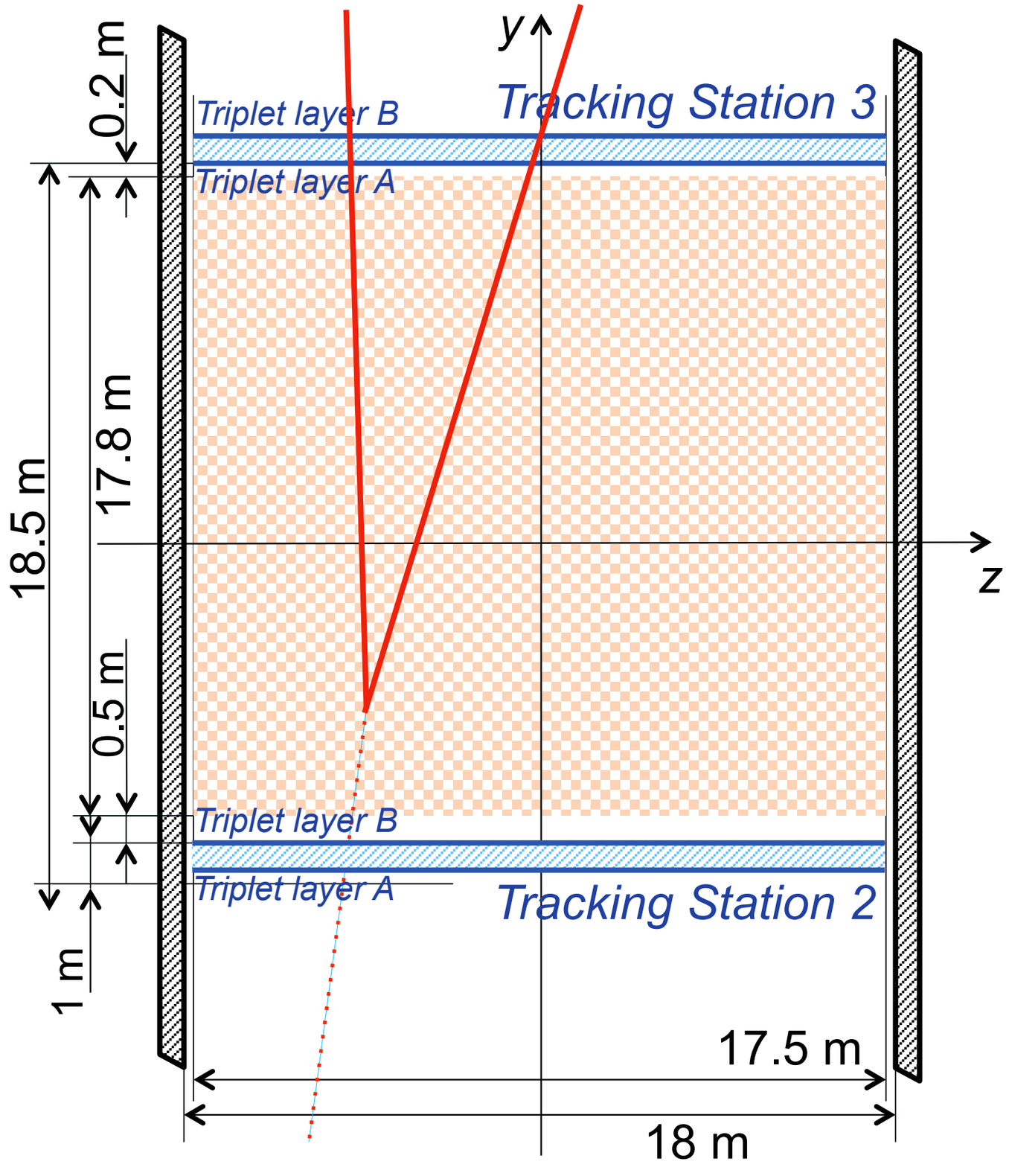

Parameter	Specification
Time resolution	$\delta t \lesssim 0.5$ ns
Angular resolution	$\delta\alpha \lesssim 0.01$ rad
Spatial resolution	$\delta x, \delta z \lesssim 0.5$ cm
Per-layer hit efficiency	$\varepsilon \gtrsim 98\%$

Angular & spatial resolution:

- Reconstruct displaced vertices: reach $m_{\mathrm{LLP}} \gtrsim K_L$ for $m_{\mathrm{mediator}} \approx 100$ GeV
- Fiducialise volume

Aside: angular resolution

- Consider decay into two particles — this is the most challenging case!
  - Higher multiplicity → easier reconstruction & (even) lower backgrounds
- Assume mediator at EW scale (e.g. 125 GeV Higgs):

$$m_{\mathrm{med}} \approx 100\ \mathrm{GeV}$$

- Average boost from pure kinematics:

$$\frac{m_{\mathrm{med}}}{2m_{\mathrm{LLP}}} \quad \Longrightarrow \quad m_{\mathrm{LLP}} \approx \tfrac{1}{2} m_{\mathrm{med}} \cdot \omega$$

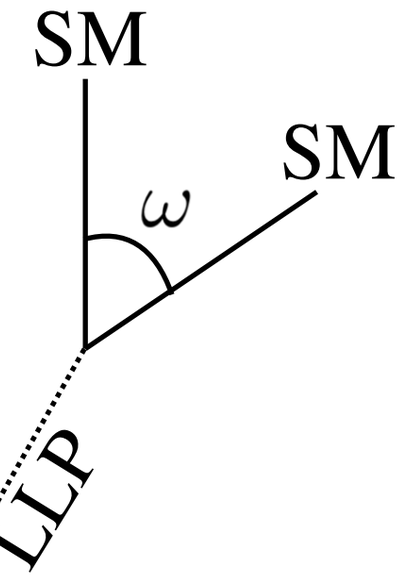

- Assume symmetric LLP decay

$$\delta\omega \approx \sqrt{2} \cdot \delta\alpha$$

ANUBIS: detector concept

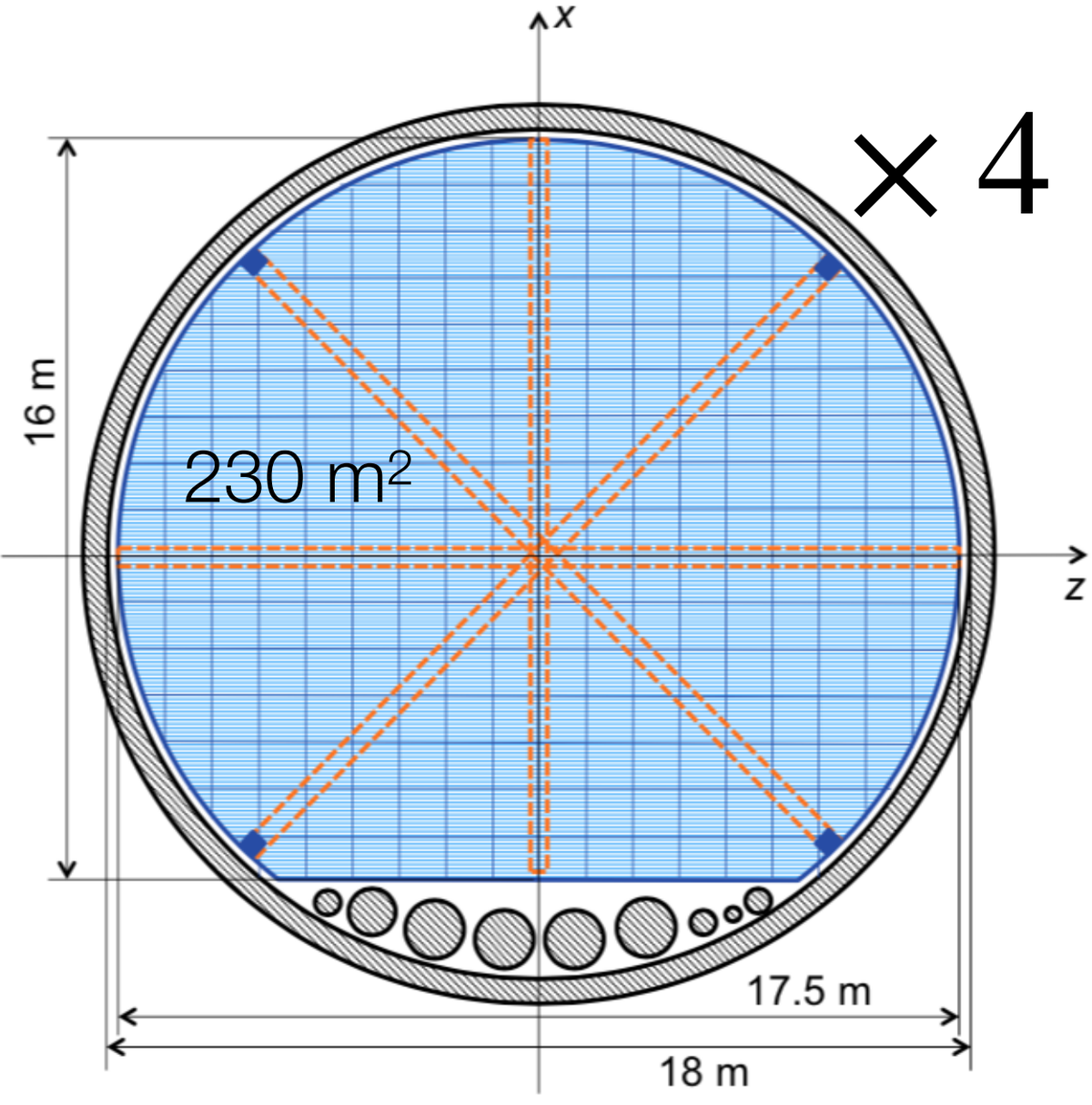

× 4

Tracking stations affixed with *cams*: extract tracking stations to surface quickly & easily in an emergency

ANUBIS: detector concept

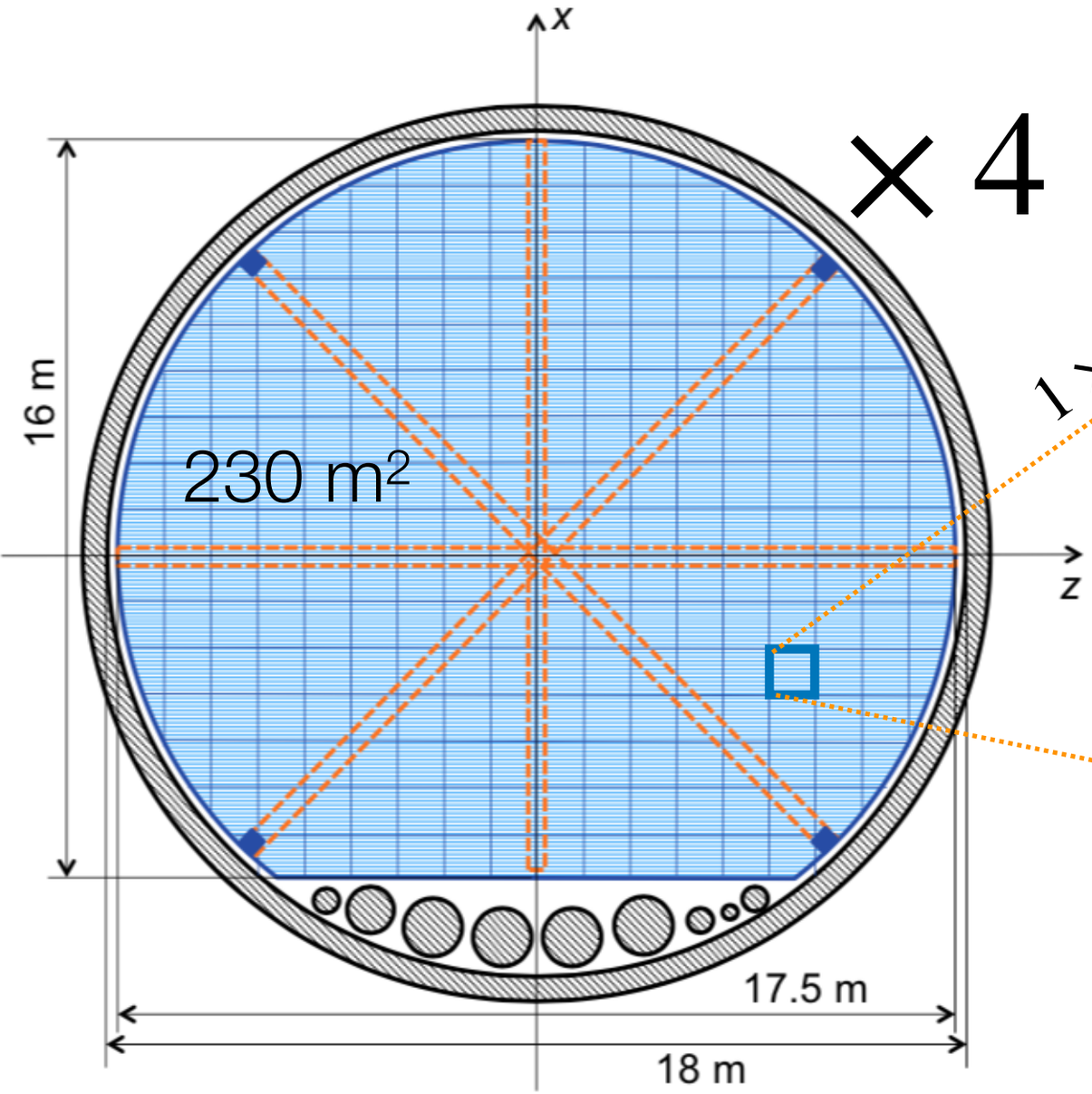

× 4

1 x 1 m² unit

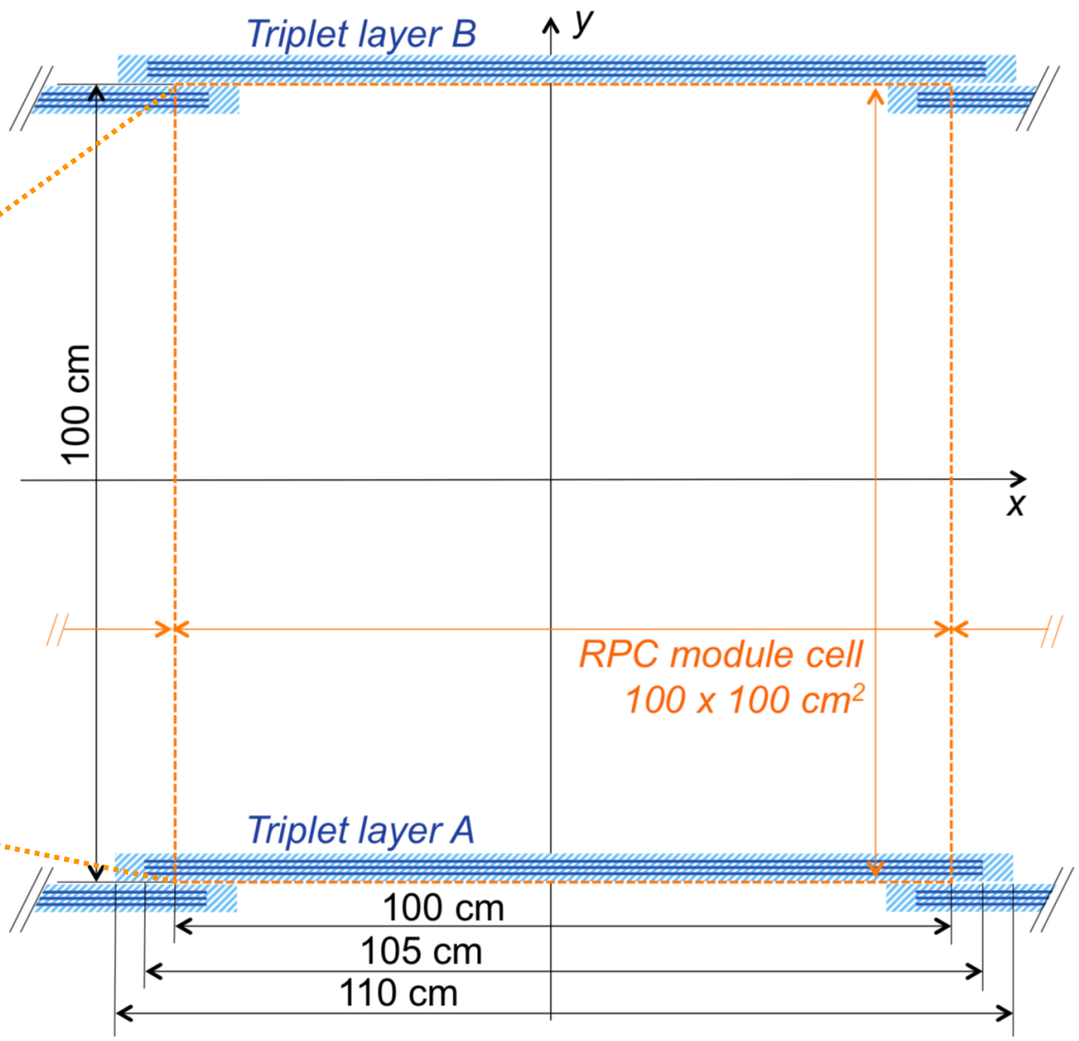

Tracking stations affixed with cams: extract tracking stations to surface quickly & easily in an emergency

Parameter	Specification
Time resolution	$\delta t \lesssim 0.5$ ns
Angular resolution	$\delta\alpha \lesssim 0.01$ rad
Spatial resolution	$\delta x, \delta z \lesssim 0.5$ cm
Per-layer hit efficiency	$\varepsilon \gtrsim 98\%$

ANUBIS: detector technology

Possible detector technology:

- Resistive Plate Chamber technology;
  ANUBIS performance specifications met by ATLAS *BIS-7 prototype* (ongoing upgrade):
  triplet of layers with 0.4 ns time resolution,
  0.1 cm spatial resolution

- *2.3 x 10^3 m^2* total instrumented area
  @3.1k€/m^2 (including mechanics, gas gap, strips, front-ends and production yield):
  ~10 M€, scales with m^2
  Each tracking station weighs
  230 m^2 x 51 kg/m^2 ~ 30 tons (OK)

- Other possibilities like finely granulated scintillators, scintillating fibres to explore
  - Not likely to further reduce costs

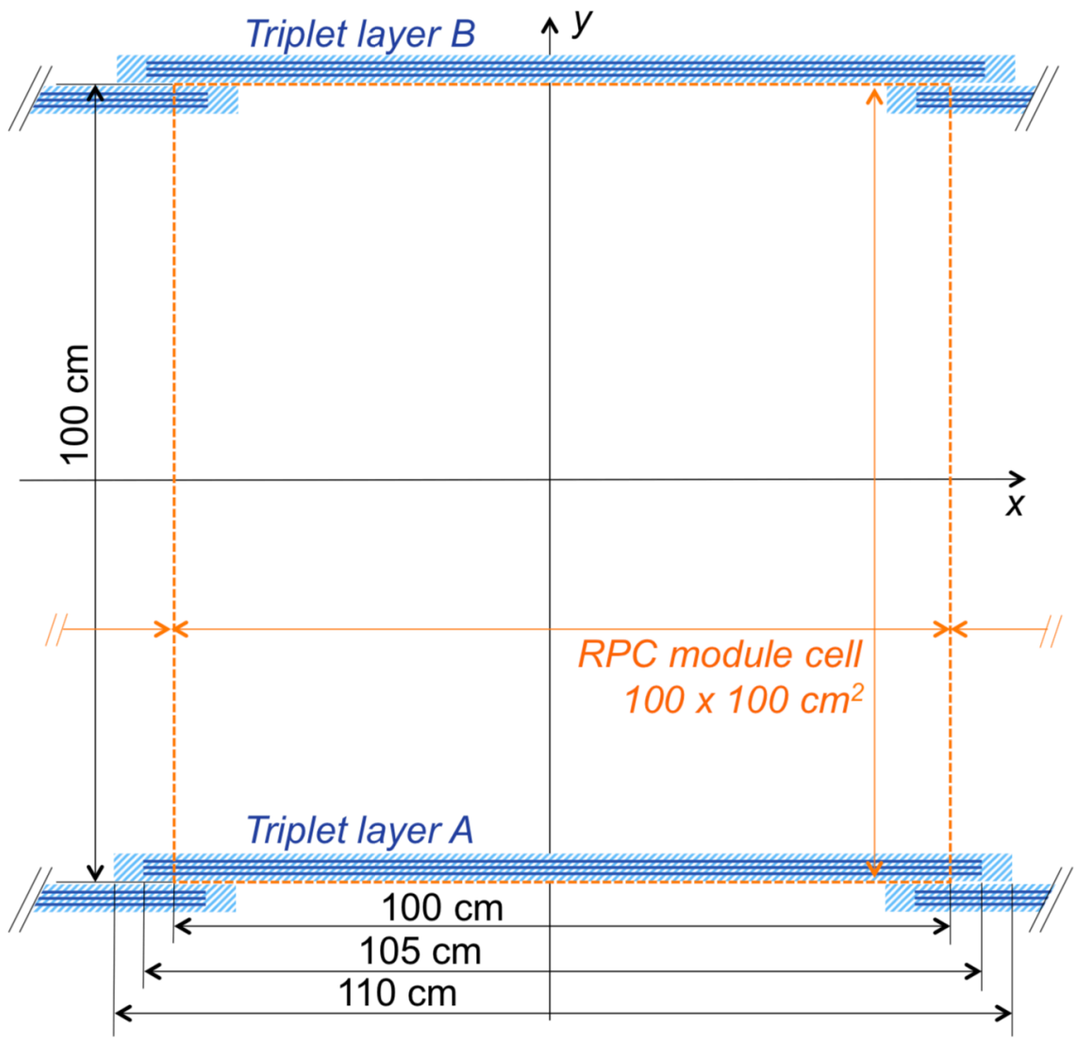

Parameter	Specification
Time resolution	$\delta t \lesssim 0.5$ ns
Angular resolution	$\delta\alpha \lesssim 0.01$ rad
Spatial resolution	$\delta x, \delta z \lesssim 0.5$ cm
Per-layer hit efficiency	$\varepsilon \gtrsim 98\%$

ANUBIS: backgrounds

It should be possible to dramatically reduce backgrounds.
The ATLAS detector serves:

- as a passive shield:

  calorimeters account for ~10 nuclear interaction lengths λ_I

- as an *active veto*:
  high-p_T neutral particles (n, K_L) typically come with energetic jets

Almost background-free by requiring isolation in $\Delta R(\mathrm{DV}, x)$

- from inner detector tracks
- from calorimeter jets
- from muon spectrometer tracks

Achieve this by *ANUBIS triggering the readout of ATLAS*

ANUBIS: backgrounds

It should be possible to dramatically reduce backgrounds.
The ATLAS detector serves:

- as a passive shield:

  calorimeters account for ~10 nuclear interaction lengths λ_I

- as an *active veto*:
  high-p_T neutral particles (n, K_L) typically come with energetic jets

Almost background-free by requiring isolation in $\Delta R(\mathrm{DV}, x)$

- from inner detector tracks
- from calorimeter jets
- from muon spectrometer tracks

Achieve this by *ANUBIS triggering the readout of ATLAS*

Additional shielding by rock between the interaction point and some regions of the tracking stations:
-> useful as control region

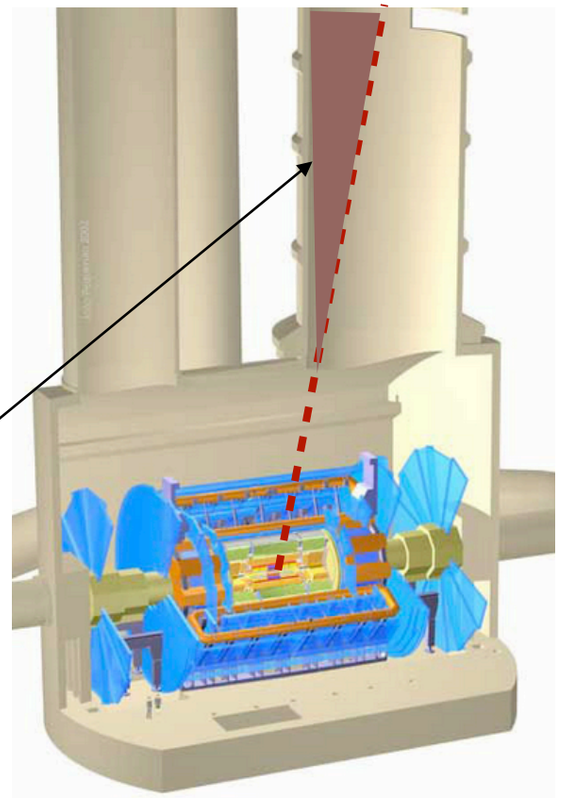

ANUBIS + ATLAS

Active veto: good coverage by ATLAS:

- Inner detector + calorimeters + muon spectrometer (below):

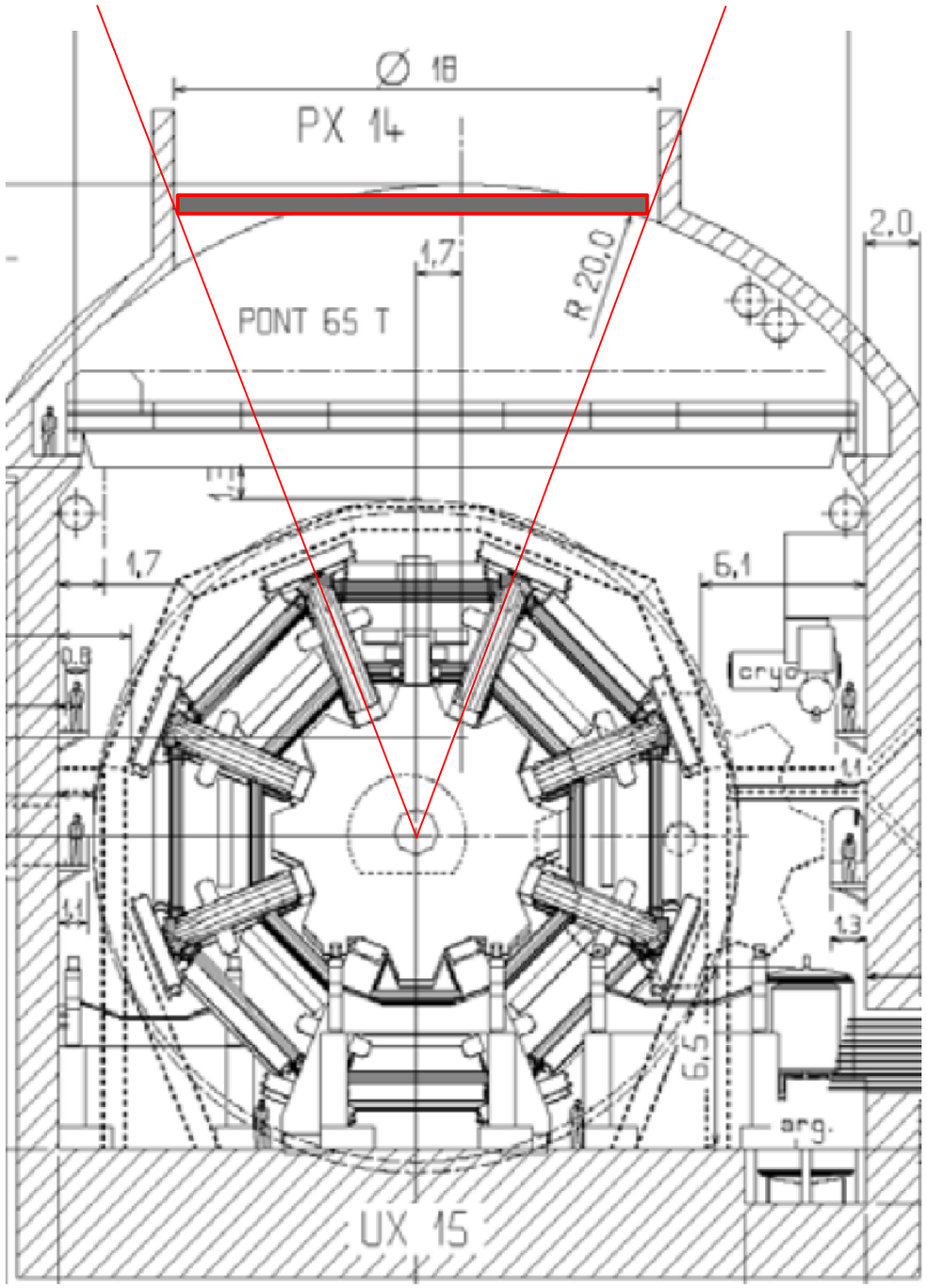

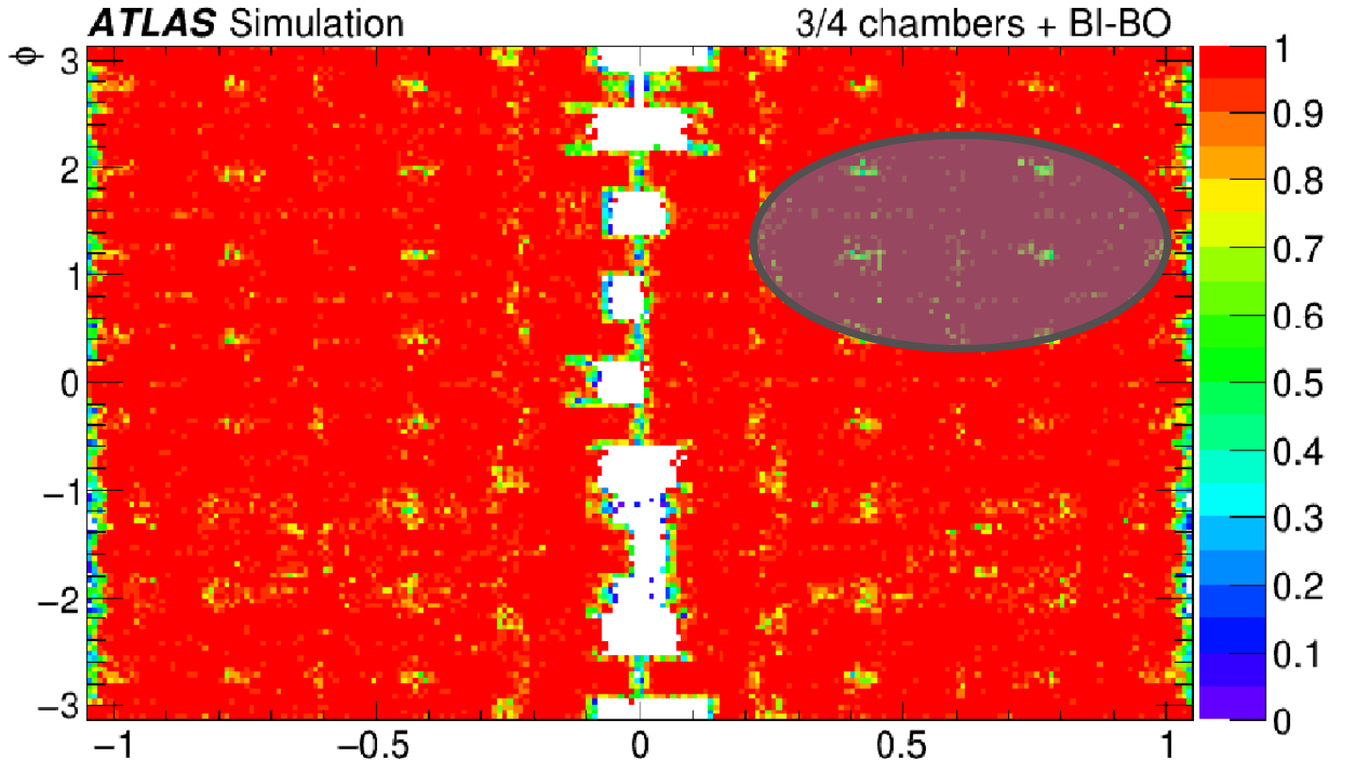

- Same RPC techno-logy as ANUBIS
- New RPC layer in inner barrel
- 9 tracking layers
- 5 m independent lever arm

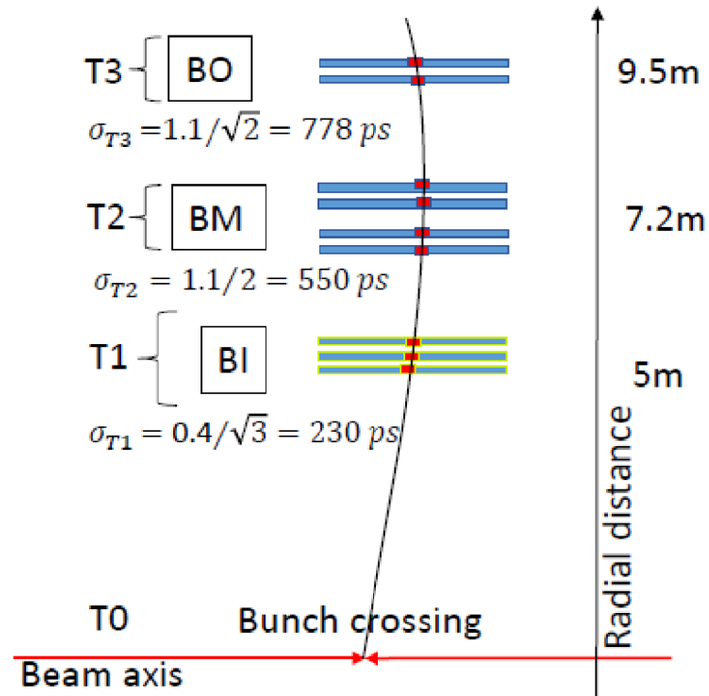

ANUBIS: sensitivity

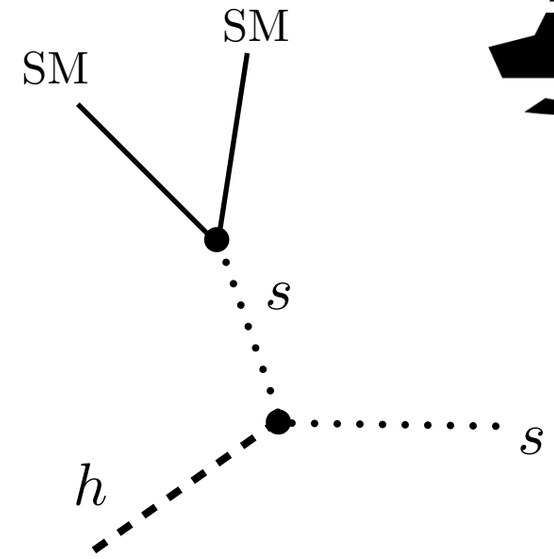

Sensitivity study for exotic Higgs decays

$$\mathcal{L} = \lambda s^2 H^\dagger H \qquad h \to ss, s \to \mathrm{SM}\,\mathrm{SM}$$

ATLAS searched for displaced vertices in the muon spectrometer.

ATLAS 1811.07370

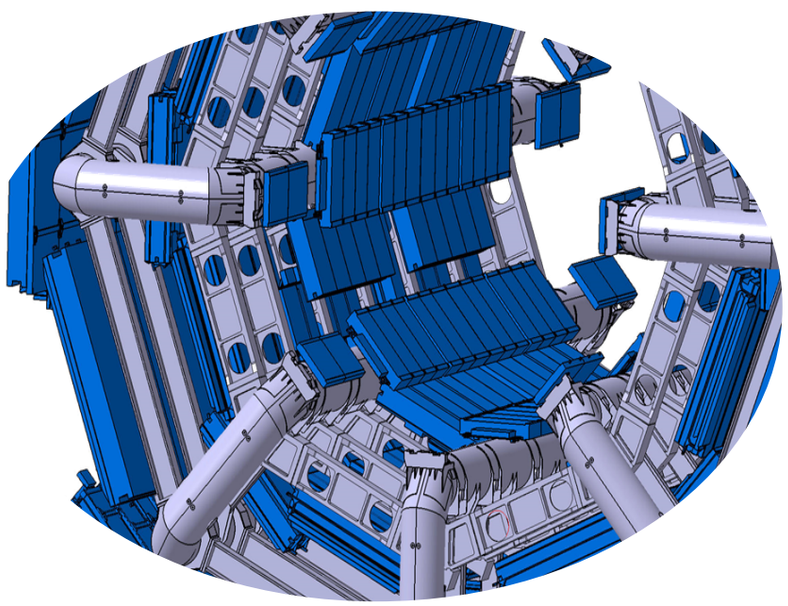

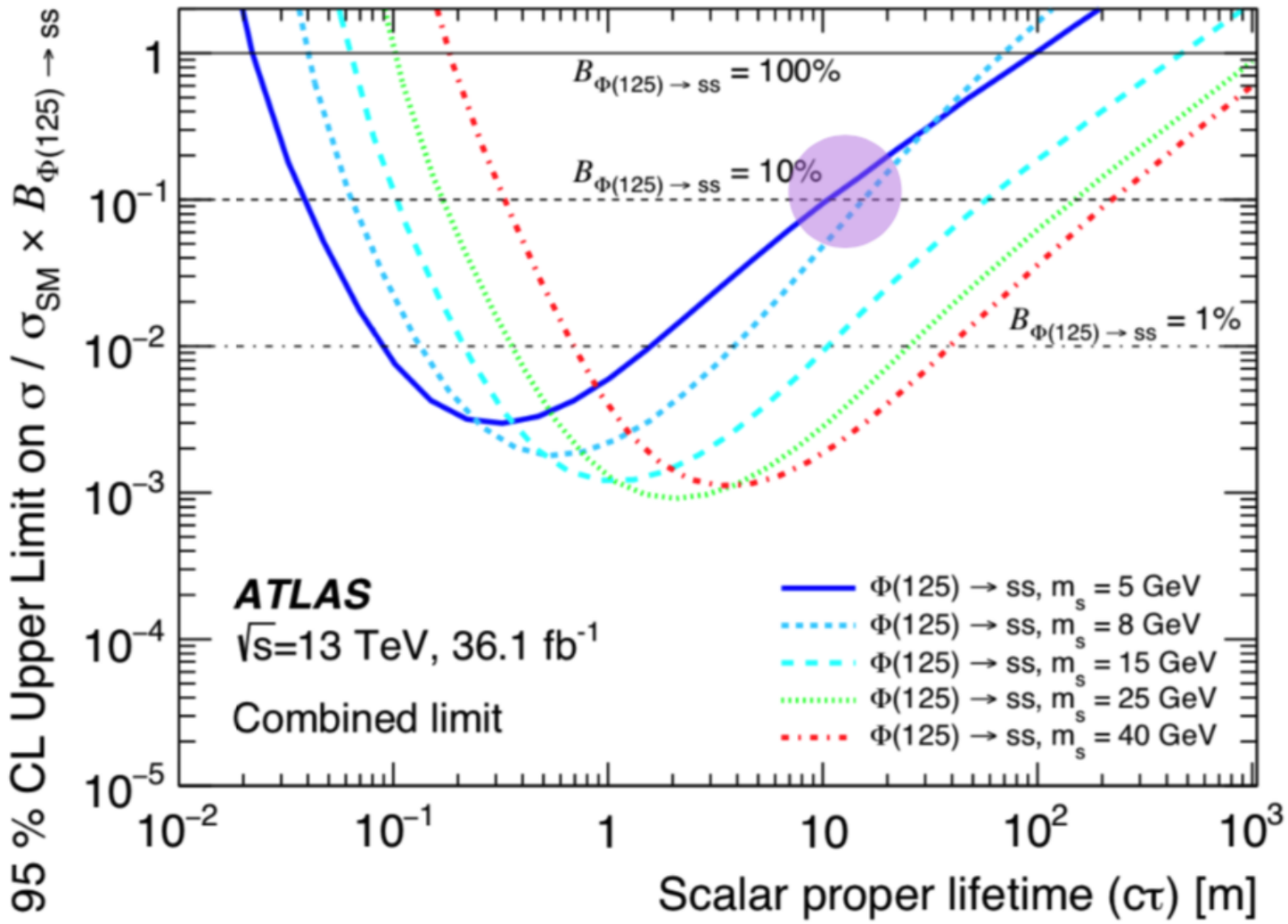

ANUBIS: sensitivity

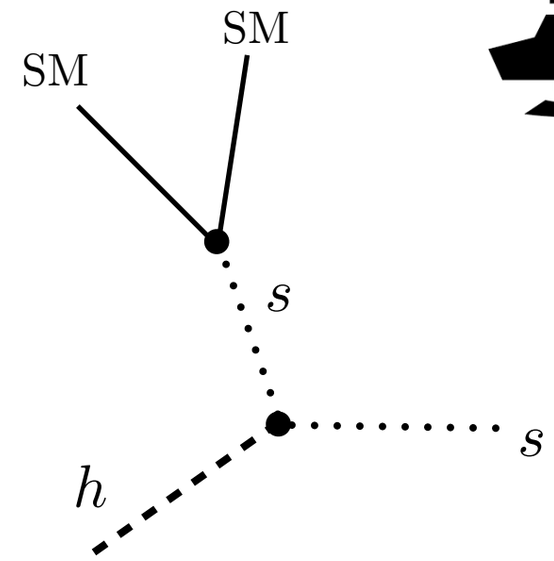

Sensitivity study for exotic Higgs decays

$$\mathcal{L} = \lambda s^2 H^\dagger H \qquad h \to ss, s \to \mathrm{SM}\,\mathrm{SM}$$

We simulated the signal with MadGraph and require the LLP to penetrate $\geq$1 tracking station

We consider two background scenarios:

- optimistic (requiring 4+ events - similar to MATHUSLA)
- conservative (requiring 50+ events - similar backgr. to ATLAS muon spectrometer search)

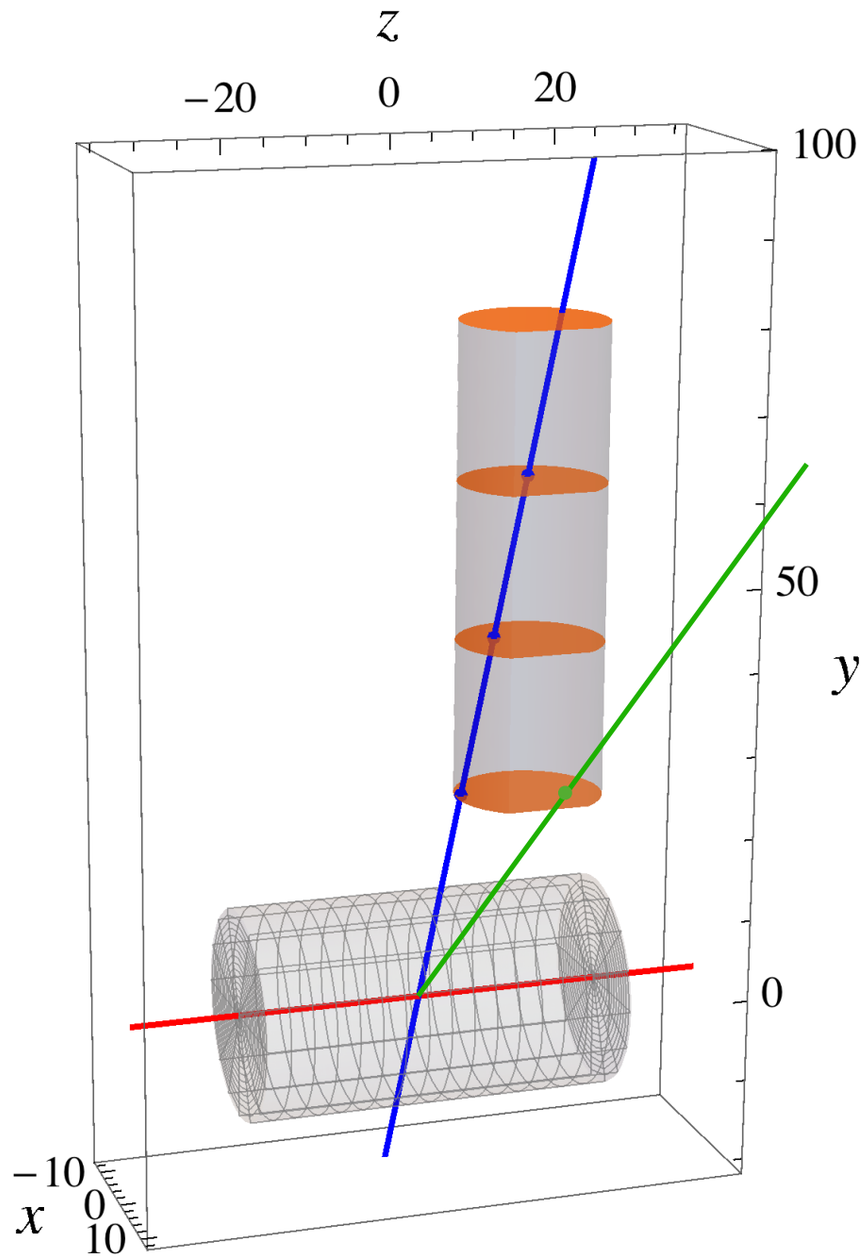

ANUBIS: sensitivity

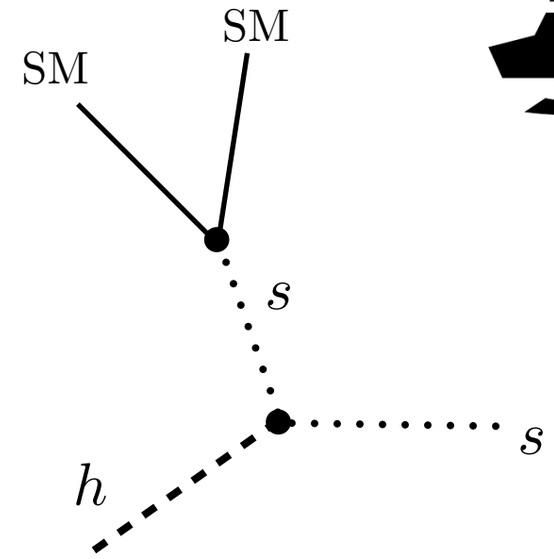

Sensitivity study for exotic Higgs decays

$$\mathcal{L} = \lambda s^2 H^\dagger H \qquad h \to ss, s \to \mathrm{SM}\,\mathrm{SM}$$

We studied three geometries:

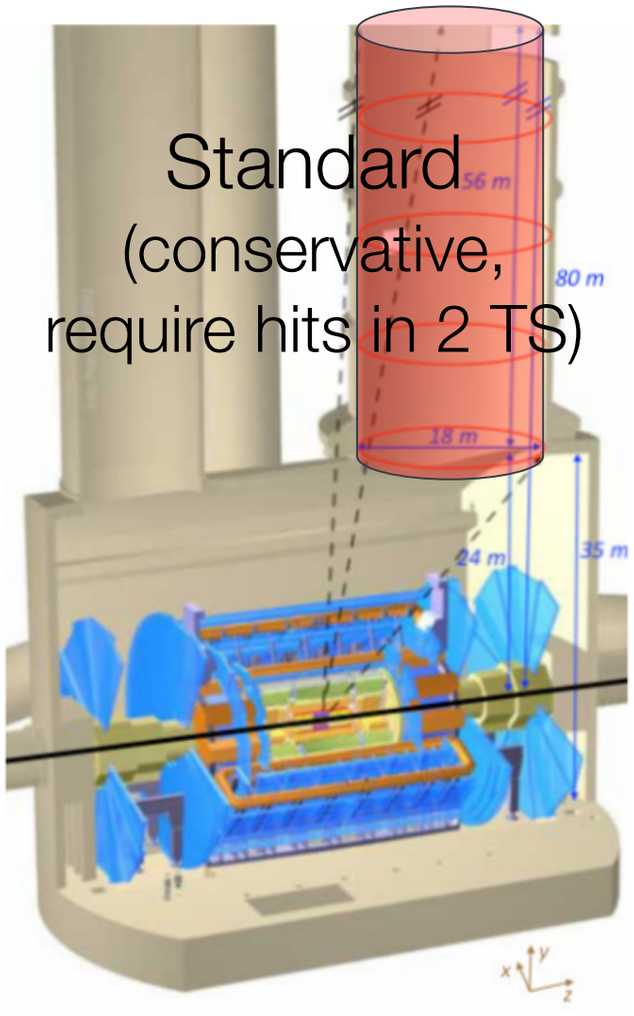

Standard
(conservative,
require hits in 2 TS)

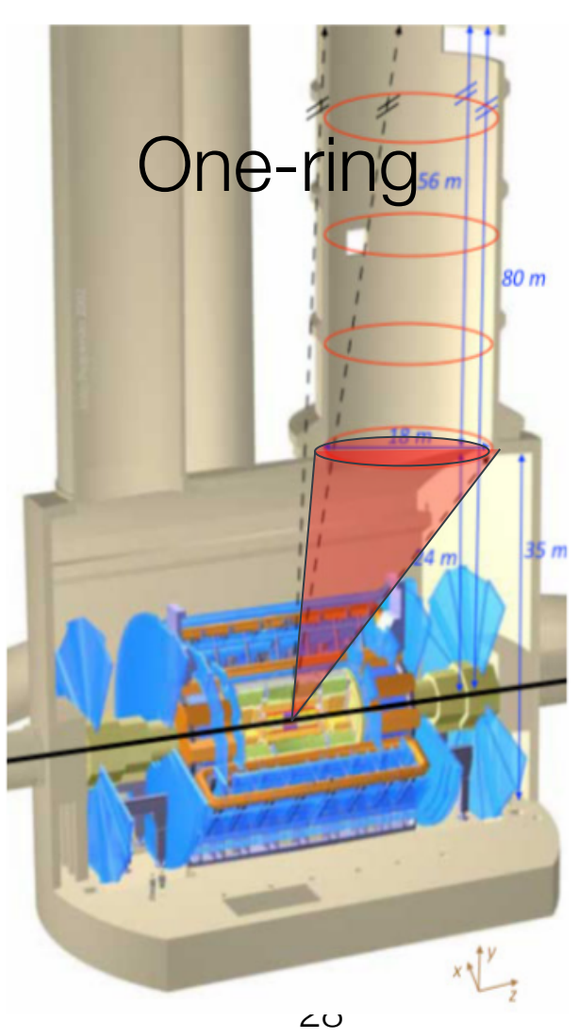

One-ring

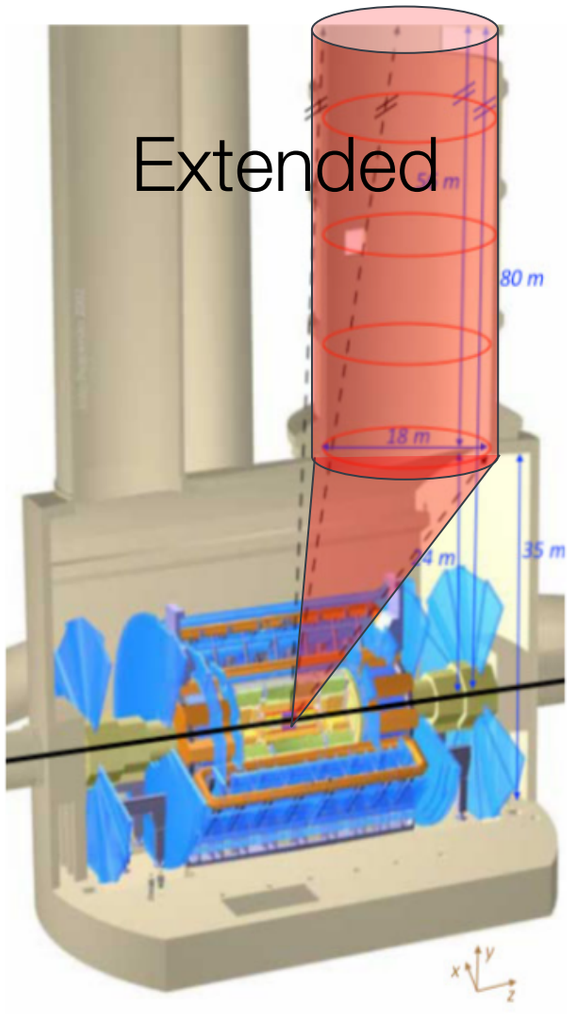

Extended

ANUBIS: sensitivity

200 x 200 x 20 m^3 decay volume →

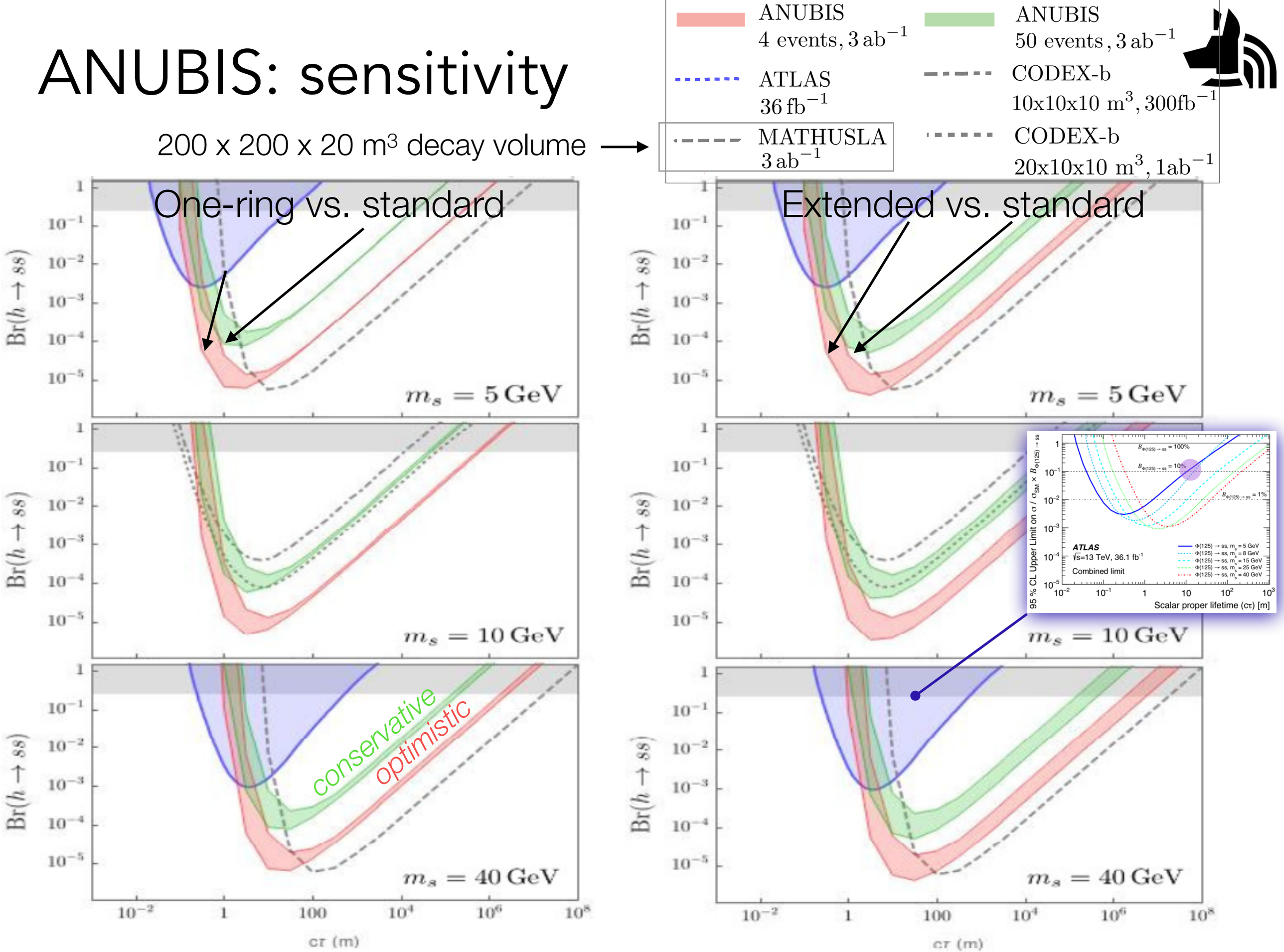

ANUBIS: sensitivity

Hirsch, Wang 2001.04750

Sensitivity study for Heavy Neutral Leptons (“sterile neutrinos”)
a) minimal scenario, Seesaw Type-I:

$$\mathcal{L} = \frac{g}{\sqrt{2}} V_{\alpha N_j}\, \bar{\ell}_\alpha \gamma^\mu P_L N_j W^-_{L\mu} + \frac{g}{2\cos\theta_W} \sum_{\alpha,i,j} V^L_{\alpha i} V^*_{\alpha N_j}\, \overline{N_j} \gamma^\mu P_L \nu_i Z_\mu$$

mixing with active v — heavy neutrinos — mixing in active v sector

Similar simulation setup:

- Require the LLP to decay within fiducial volume
- 3 ab^{-1} at 14 TeV
- Optimistic scenario considered
- Assume one additional heavy lepton, light enough for LHC

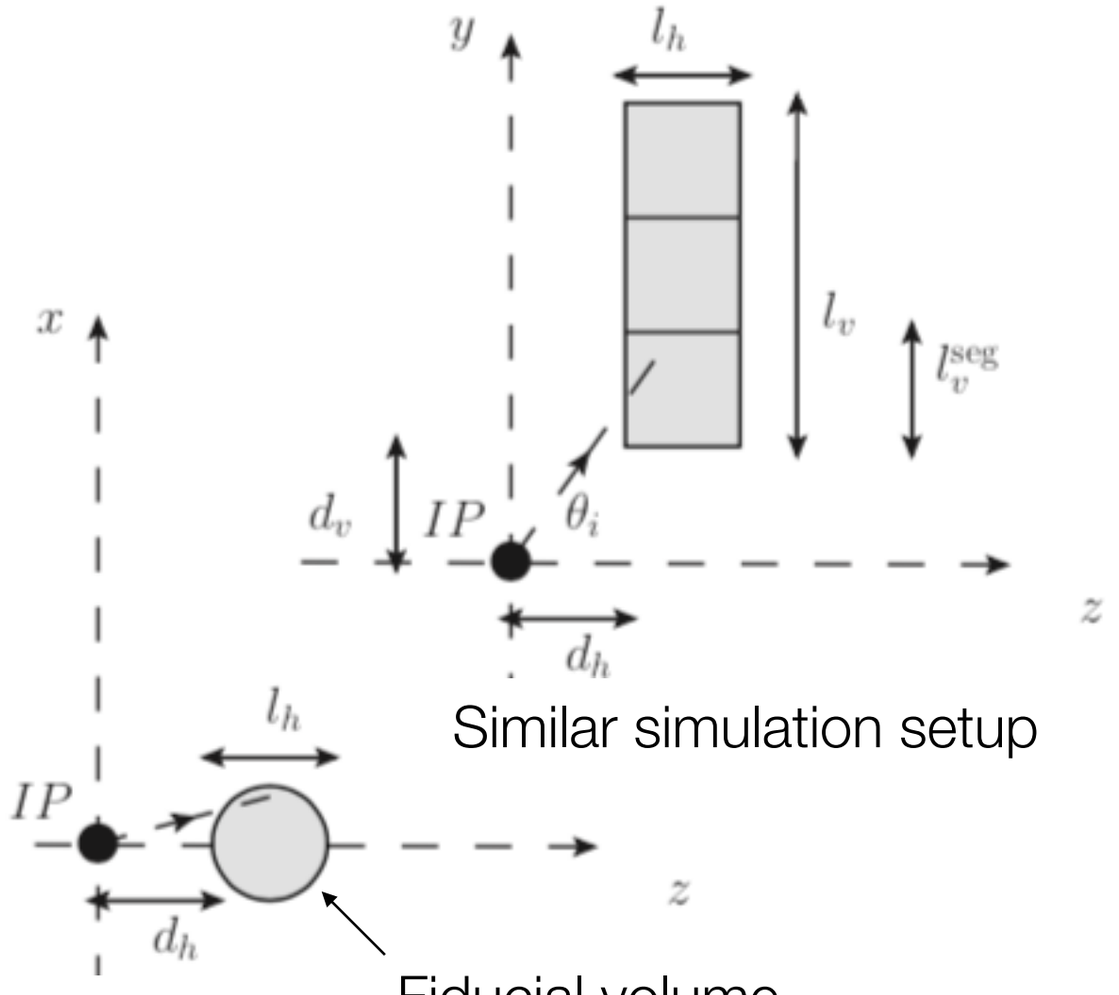

Similar simulation setup

Fiducial volume

ANUBIS: sensitivity

Hirsch, Wang 2001.04750

Sensitivity study for Heavy Neutral Leptons (“sterile neutrinos”)
a) minimal scenario, Seesaw Type-I:

$$\mathcal{L} = \frac{g}{\sqrt{2}} \underline{V_{\alpha N_j}} \; \bar{\ell}_\alpha \gamma^\mu P_L \underline{N_j} W^-_{L\mu} + \frac{g}{2\cos\theta_W} \sum_{\alpha,i,j} \underline{V^L_{\alpha i}} V^*_{\alpha N_j} \overline{N_j} \gamma^\mu P_L \nu_i Z_\mu$$

mixing with active ν — heavy neutrinos — mixing in active ν sector

Similar simulation setup:

- Require the LLP to decay within fiducial volume
- 3 ab^{-1} at 14 TeV
- Optimistic scenario considered
- Assume one additional heavy lepton, light enough for LHC

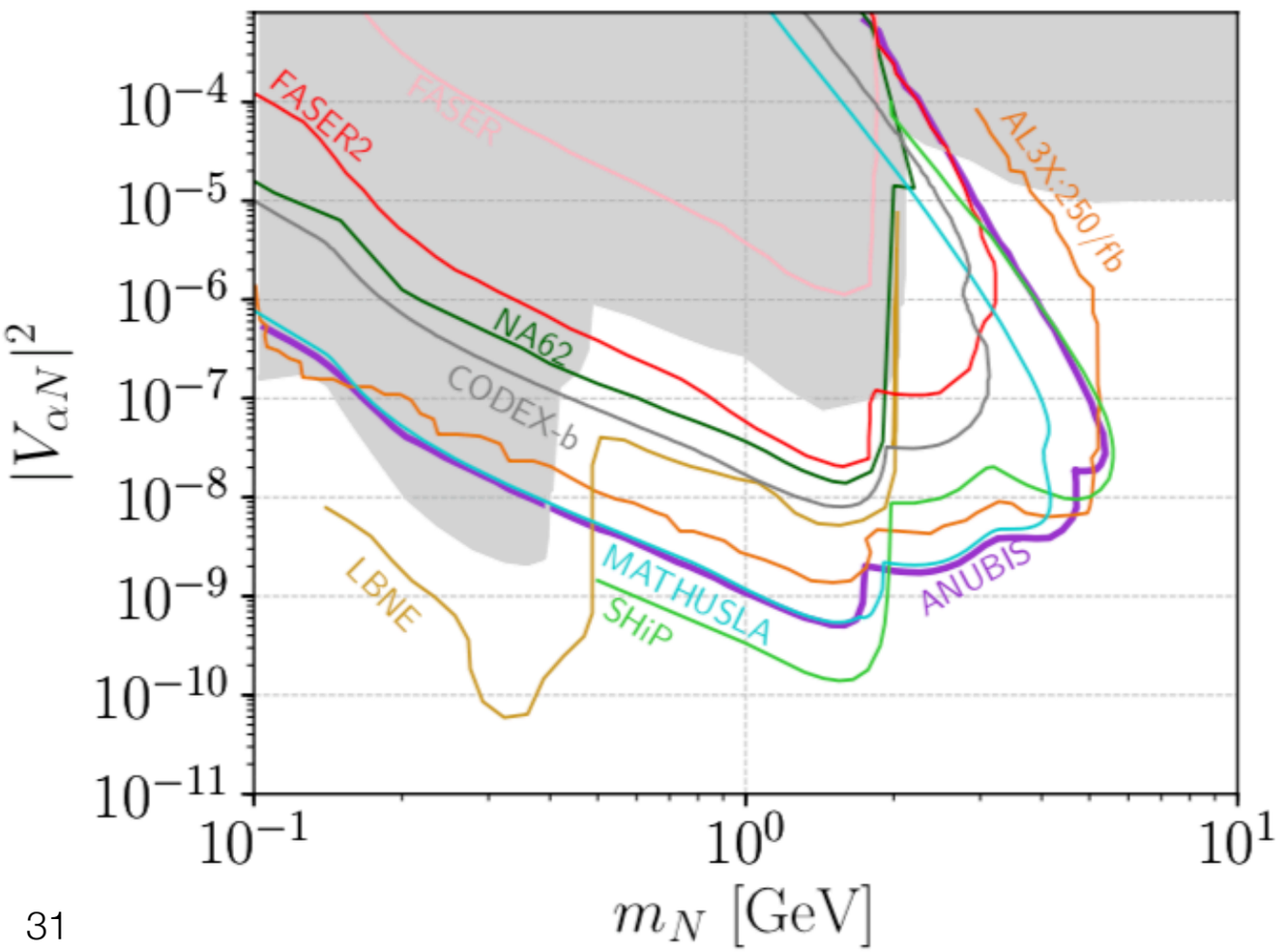

ANUBIS: sensitivity

Hirsch, Wang 2001.04750

Sensitivity study for Heavy Neutral Leptons (“sterile neutrinos”)

b) minimal left-right symmetric model:

$$SU(3)_C \times SU(2)_L \times SU(2)_R \times U(1)_{B-L}$$

c) gauged U(1)$_{B\text{-}L}$ model:

$$U(1)_{B-L}$$ + extra Higgs boson breaking it

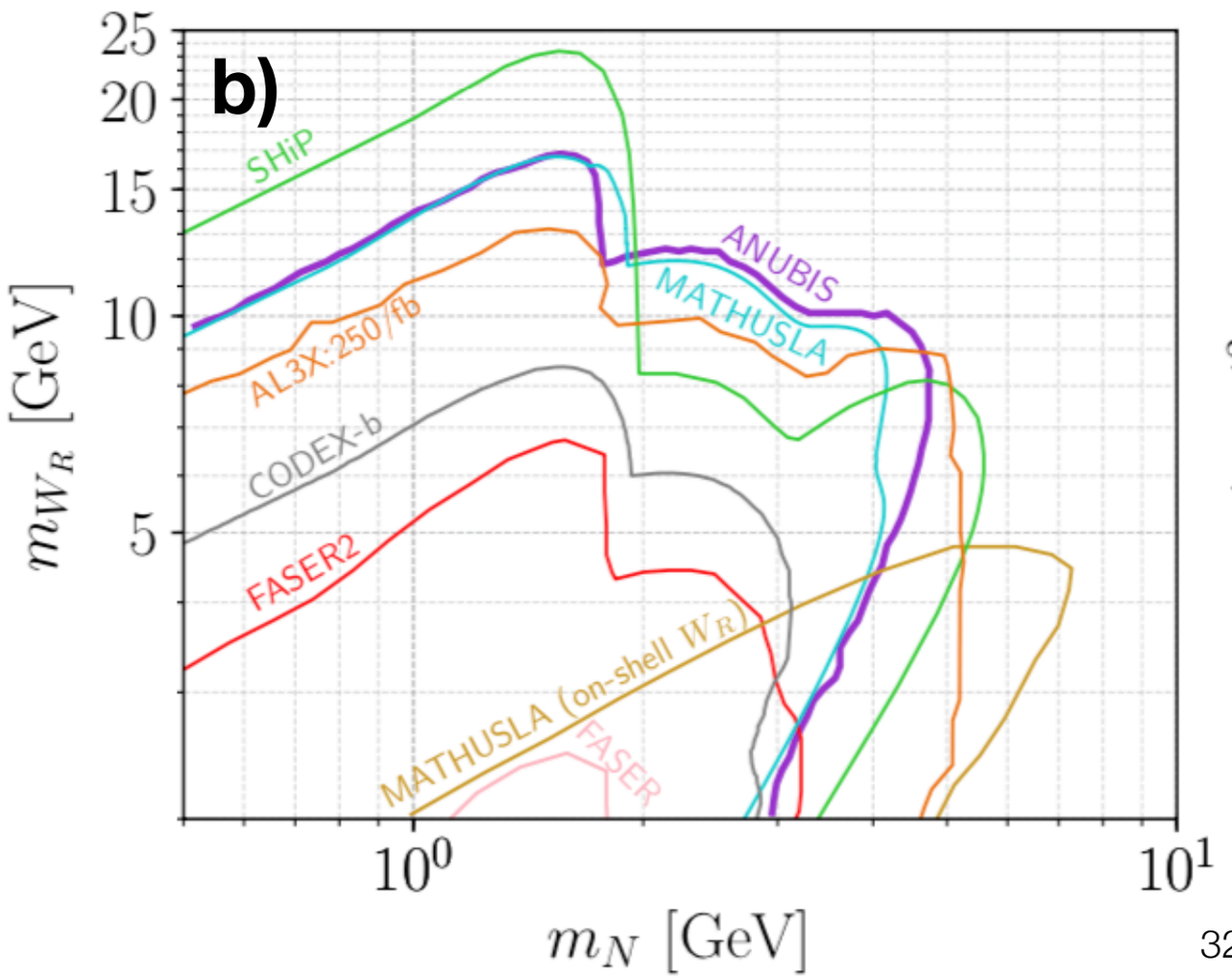

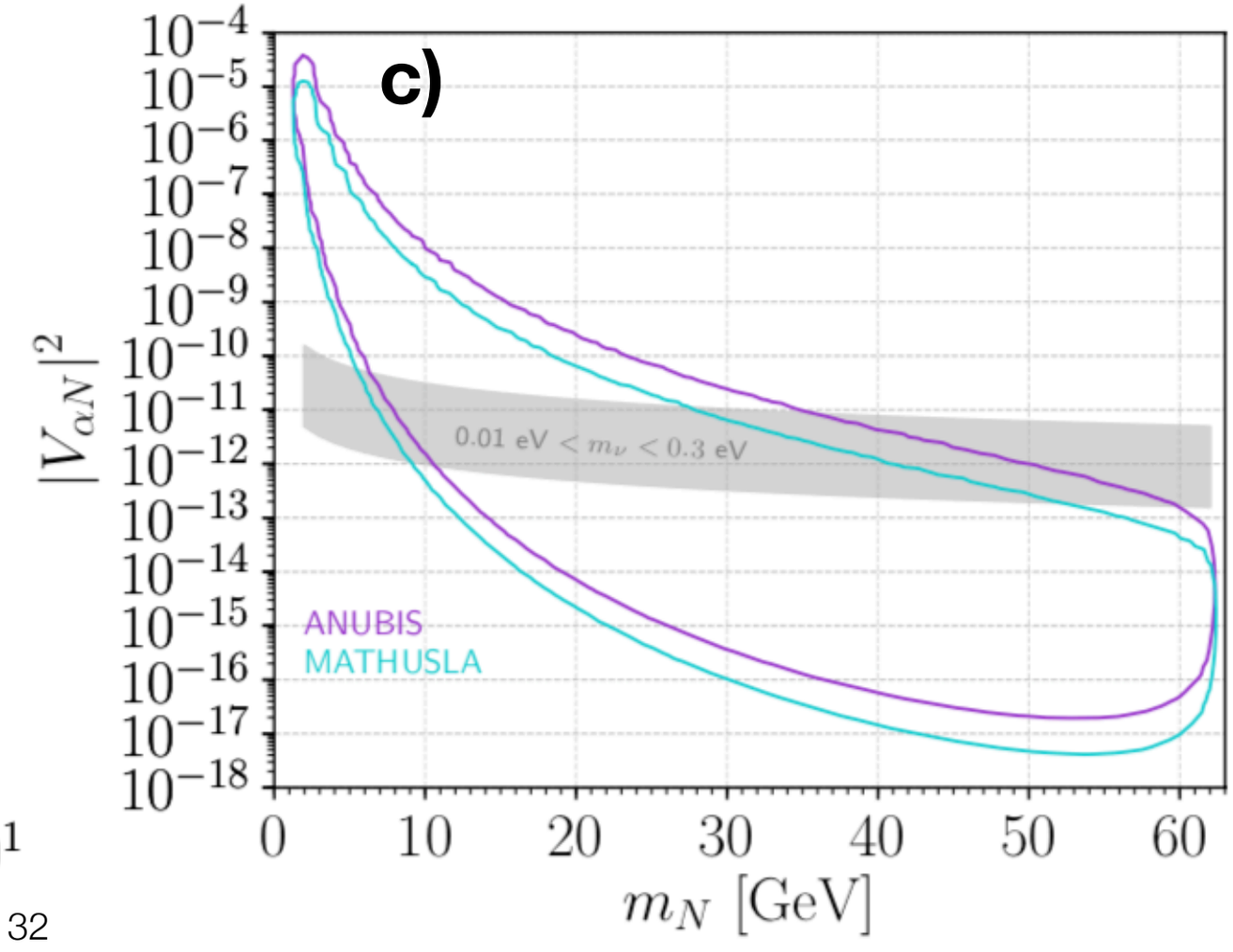

ANUBIS: sensitivity

Hirsch, Wang 2001.04750

Heavy neutral leptons at ANUBIS

Martin Hirsch[1,*] and Zeren Simon Wang[2,†]

[1] *AHEP Group, Instituto de Física Corpuscular – CSIC/Universitat de València Calle Catedrático José Beltrán, 2 E-46980 Paterna, Spain*

[2] *Asia Pacific Center for Theoretical Physics (APCTP) - Headquarters San 31, Hyoja-dong, Nam-gu, Pohang 790-784, Korea*

Recently Bauer *et al.* [1] proposed ANUBIS, an auxiliary detector to be installed in one of the shafts above the ATLAS or CMS interaction point, as a tool to search for long-lived particles. Here, we study the sensitivity of this proposal for long-lived heavy neutral leptons (HNLs) in both minimal and extended scenarios. We start with the minimal HNL model where both production and decay of the HNLs are mediated by active-sterile neutrino mixing, before studying the case of right-handed neutrinos in a left-right symmetric model. We then consider a $U(1)_{B-L}$ extension of the SM. In this model HNLs are produced from the decays of the mostly SM-like Higgs boson, via mixing in the scalar sector of the theory. In all cases, we find that ANUBIS has sensitivity reach comparable to the proposed MATHUSLA detector. For the minimal HNL scenario, the contributions from W's decaying to HNLs are more important at ANUBIS than at MATHUSLA, extending the sensitivity to slightly larger HNL masses at ANUBIS.

ANUBIS: sensitivity

de Vries, Reiner, Günther, Wang, Zhou 2010.07035

Long-lived Sterile Neutrinos at the LHC in Effective Field Theory

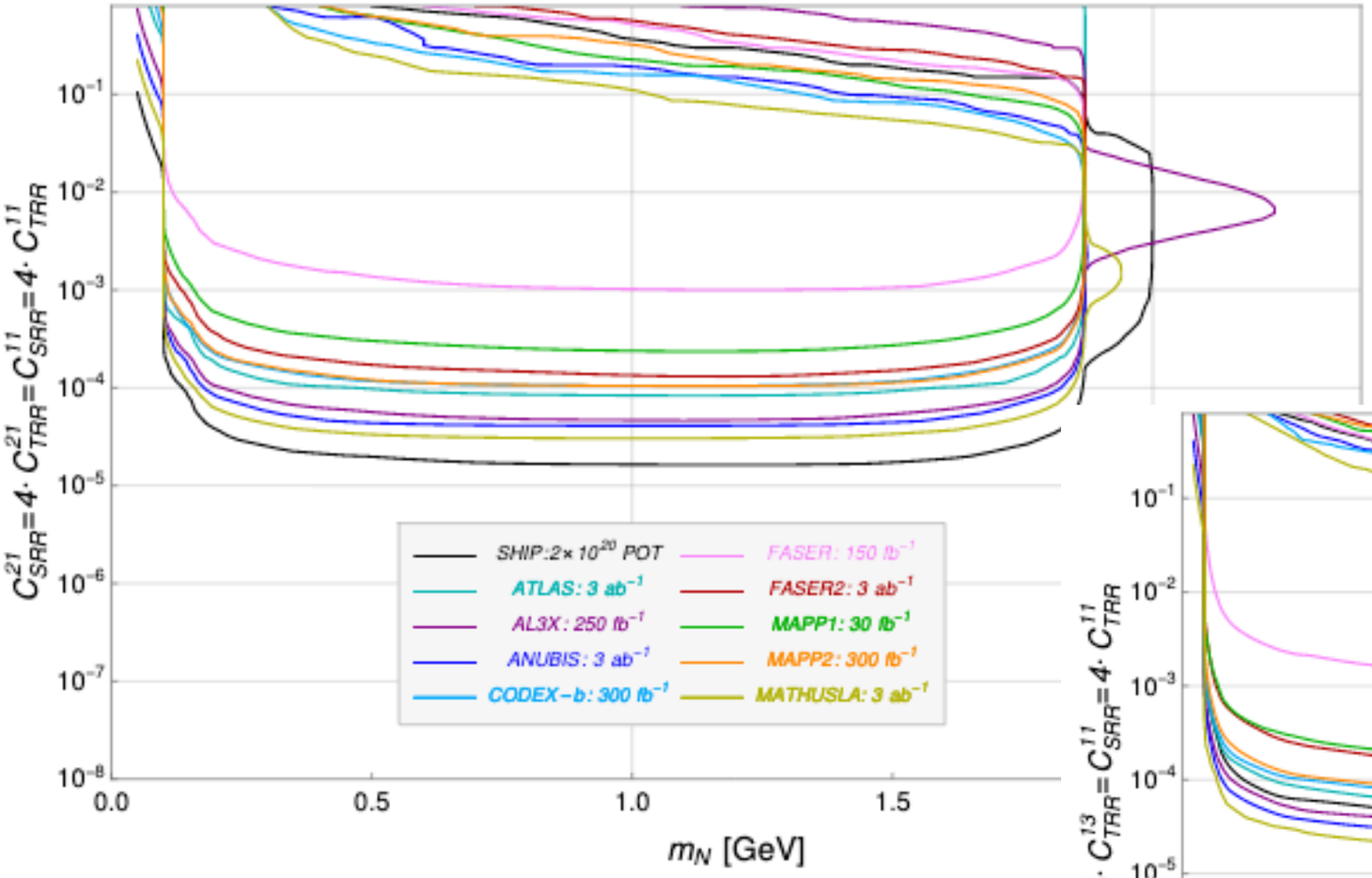

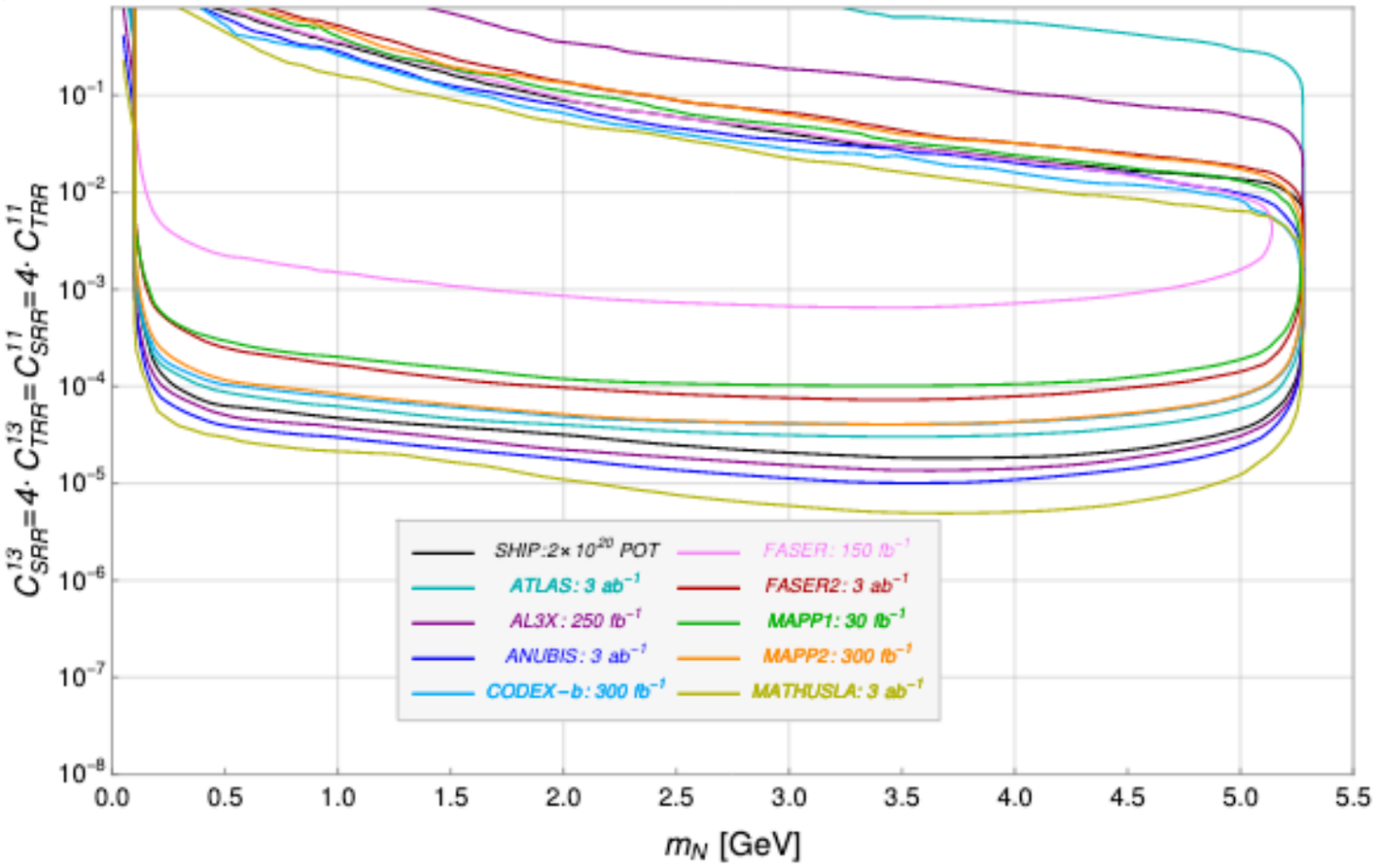

ANUBIS: sensitivity

Dreiner, Günther, Wang 2008.07539

R-parity Violation and Light Neutralinos at ANUBIS and MAPP

In R-parity-violating supersymmetry the lightest neutralino can be very light, even massless. For masses in the range 500 MeV $\lesssim m_{\tilde{\chi}_1^0} \lesssim$ 4.5 GeV the neutralino can be produced in hadron collisions from rare meson decays via an R-parity violating coupling, and subsequently decay to a lighter meson and a charged lepton. Due to the small neutralino mass and for small R-parity violating coupling the lightest neutralino is long-lived, leading to displaced vertices at fixed-target and collider experiments. In this work, we study such signatures at the proposed experiments ANUBIS and MAPP at the LHC. We also compare their sensitivity reach in these scenarios with that of other present and proposed experiments at the LHC such as ATLAS, CODEX-b, and MATHUSLA. We find that ANUBIS and MAPP can show complementary or superior sensitivity.

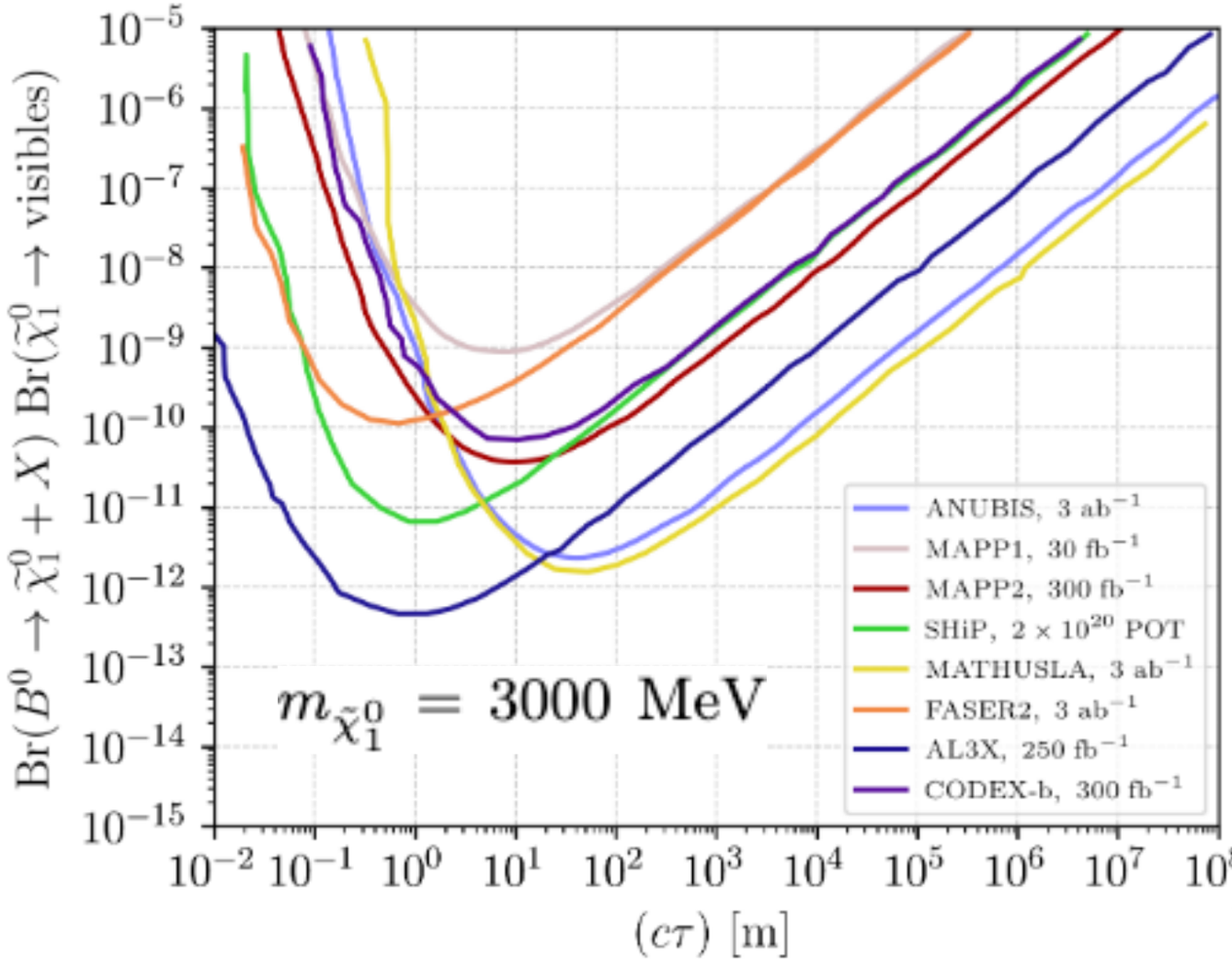

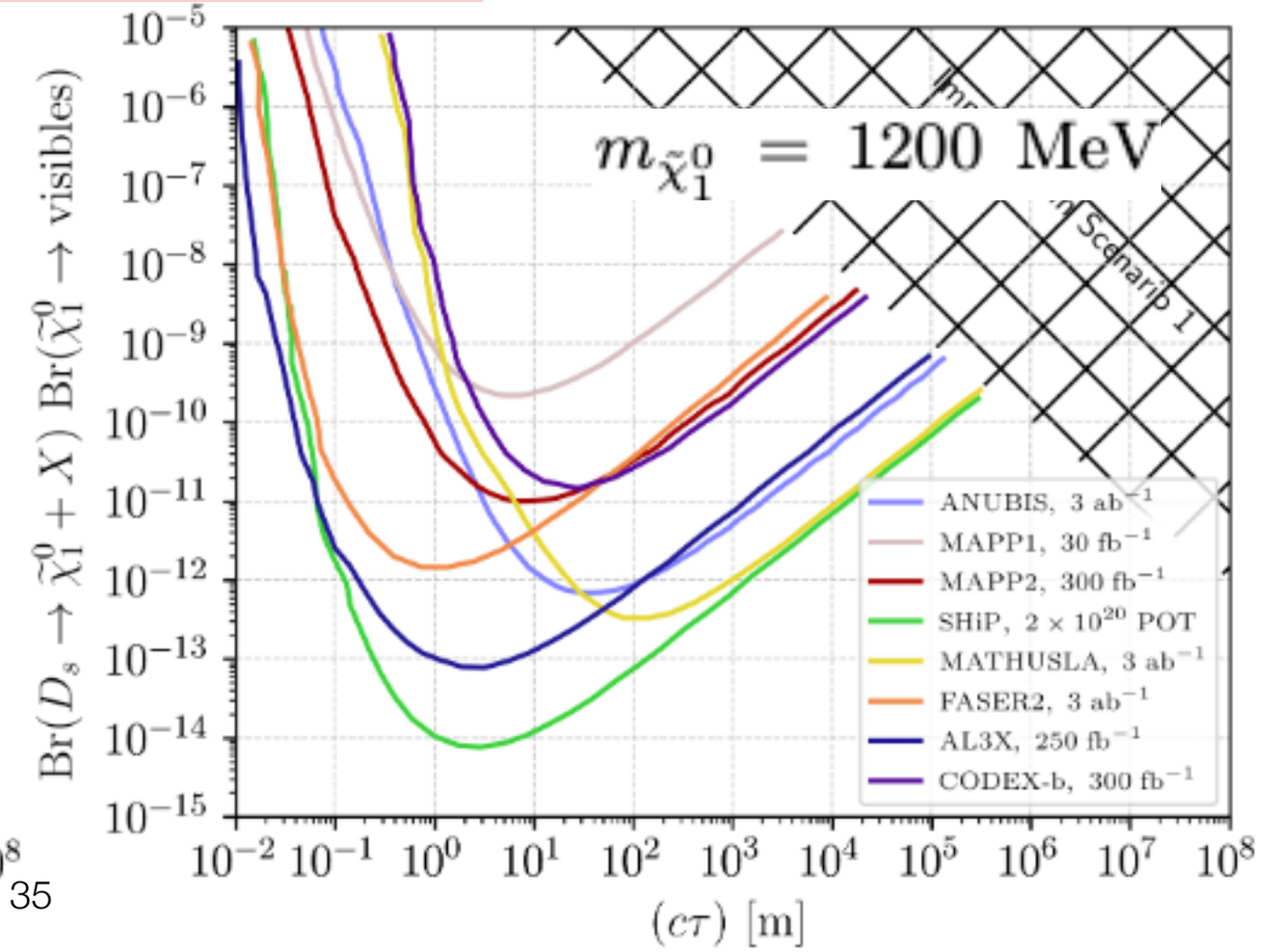

ANUBIS: advantages

- **Up to 10^3 better sensitivity** compared current or approved future experiments for massive neutral LLPs with $10^2 < c\tau/\mathrm{m} < 10^8$

ANUBIS: advantages

- **Up to 10^3 better sensitivity** compared current or approved future experiments for massive neutral LLPs with $10^2 < c\tau/\mathrm{m} < 10^8$

- Moderate costs: **~10 MCHF**

ANUBIS: advantages

- **Up to 10^3 better sensitivity** compared current or approved future experiments for massive neutral LLPs with $10^2 < c\tau/\mathrm{m} < 10^8$
- Moderate costs: **~10 MCHF**
- **Large and projective** decay volume

ANUBIS

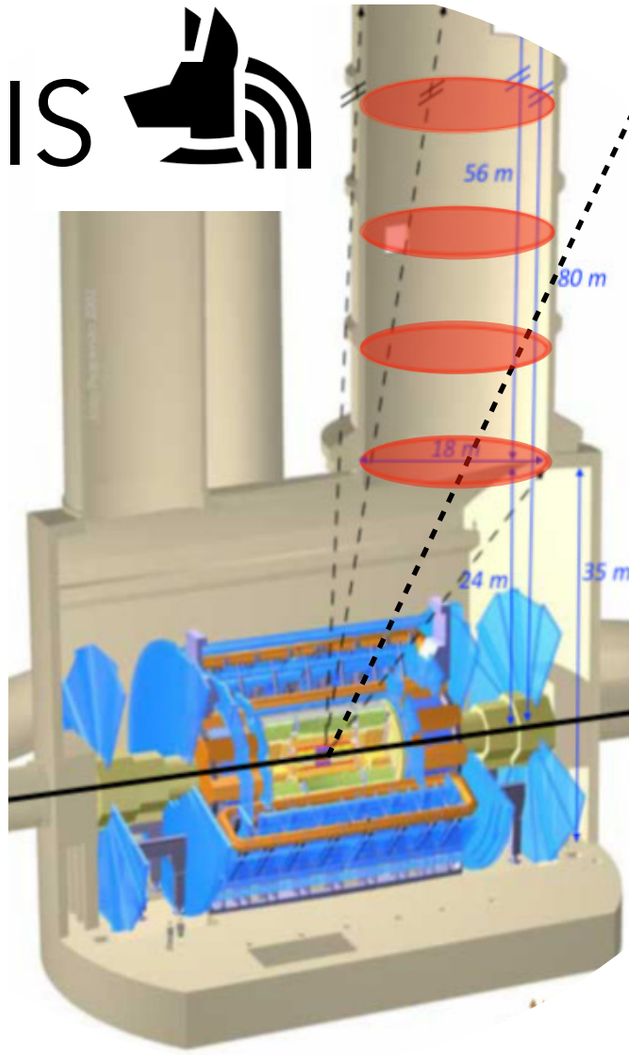

ANUBIS: advantages

- **Up to 10^3 better sensitivity** compared current or approved future experiments for massive neutral LLPs with $10^2 < c\tau/\mathrm{m} < 10^8$
- Moderate costs: **~10 MCHF**
- **Large and projective** decay volume
- Adjacency to ATLAS (and/or CMS):
  - ANUBIS can trigger ATLAS (and/or CMS)
    - **Full picture of the event (unique)**
    - Crucial if LLPs produced with SM particles!
      - E.g. gauge-med. SUSY, split SUSY, etc. [1]
      - E.g. Z+ALPs: $Z(\to \ell\ell)a(\to \gamma\gamma)$, etc. [2]

ANUBIS

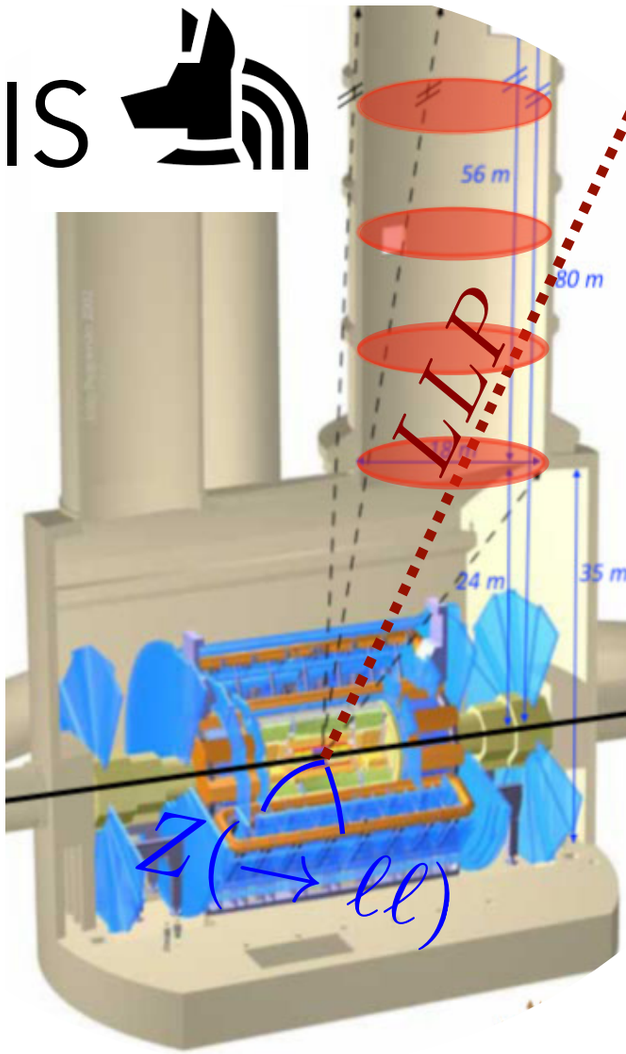

[1] Recent review: Lee, Ohm, Soffer, Yu, 1810.12602
[2] Bauer, Heiles, Neubauer, Thamm, 1808.10323

Conclusions

- **AN U**nderground **B**elayed **I**n-**S**haft search experiment is a cost-effective (< 10M€) alternative to optimise the LHC reach searching for LLPs produced orthogonal to the beam direction
- Unique opportunity to **close the gap** $10^2 < c\tau/\mathrm{m} < 10^8$!
- Existing geometry and infrastructure minimise civil engineering
- ANUBIS' physics reach is comparable to CODEX-b and MATHUSLA
- **Unique feature:** adjacency & trigger integration with ATLAS to provide a **full picture of event**
- ANUBIS is **1:1 transferrable to CMS** using its main PX56 shaft
- ANUBIS combinable with other search strategies

Next Steps

- ***pro*ANUBIS:** two $1.8 \times 1.2 \times 1\ \mathrm{m}^3$ prototypes:
  - **Measure fluxes** in PX14 shaft & **correlate** to ATLAS (Run 3)

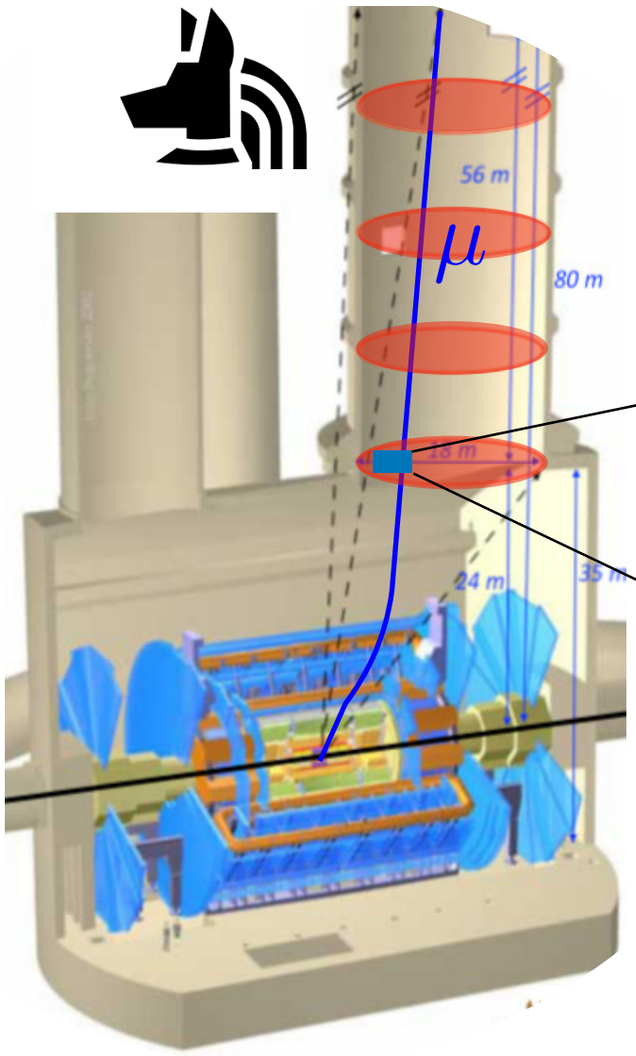

*pro*ANUBIS

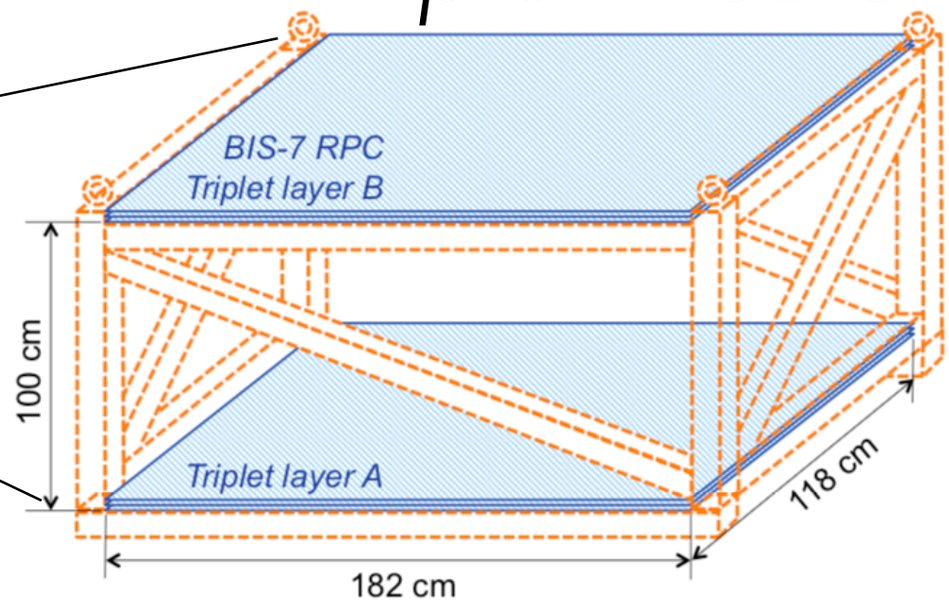

Next Steps

- ***pro*ANUBIS:** two $1.8 \times 1.2 \times 1\ \mathrm{m}^3$ prototypes:
  - **Measure fluxes** in PX14 shaft & **correlate** to ATLAS (Run 3)
  - R&D for **next RPC generation** for LLP search detectors
    - Eco-gas + ageing, reduced pitch, fully integrated R/O electronics, **improved timing & reduced costs!**

*pro*ANUBIS

Next Steps

- ***pro*ANUBIS:** two $1.8 \times 1.2 \times 1\ \mathrm{m}^3$ prototypes:
  - **Measure fluxes** in PX14 shaft & **correlate** to ATLAS (Run 3)
  - R&D for **next RPC generation** for LLP search detectors
    - Eco-gas + ageing, reduced pitch, fully integrated R/O electronics, **improved timing & reduced costs!**

*pro*ANUBIS

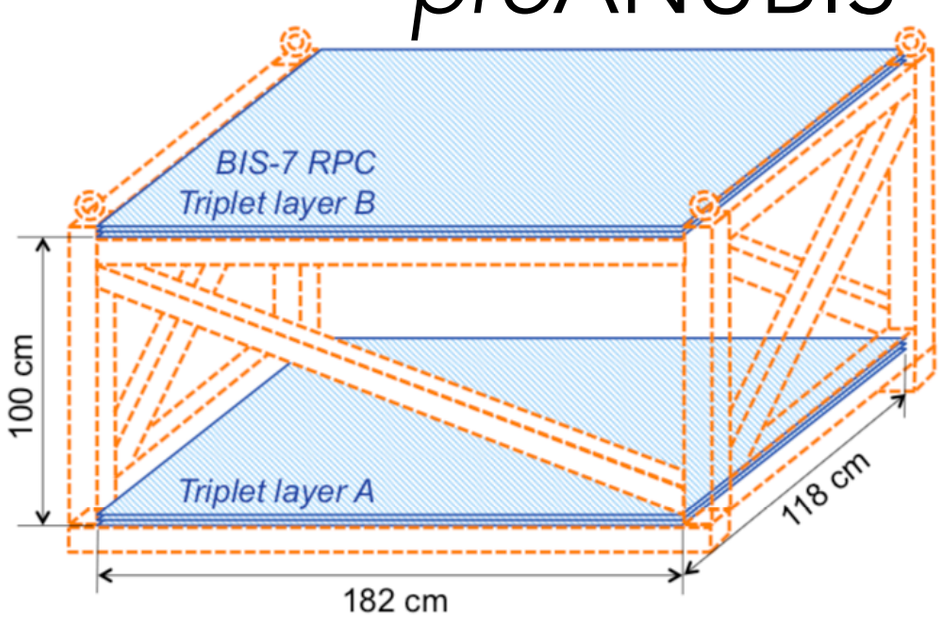

- **Detailed simulations**, full GEANT4 model
  - Correlate results with *pro*ANUBIS

- **Exciting & intense years ahead of us**:
  - Pre-production in 4 years (one tracking station octant)
  - Assembly, installation, commissioning in time for HL-LHC!

Thank you!

ANUBIS: sensitivity

Hirsch, Wang 2001.04750

Sensitivity study for Heavy Neutral Leptons (“sterile neutrinos”)
b) minimal left-right symmetric model:

$$\mathcal{L} = \frac{g_R}{\sqrt{2}} \left(\bar{d} \gamma^\mu P_R u + \underline{V^R_{\alpha N}} \cdot \bar{l}_\alpha \gamma^\mu P_R \underline{N} \right) W^-_{R\mu} +$$

$$+ \frac{g_R}{\sqrt{1 - \tan^2 \theta_W (g_L/g_R)^2}} Z^\mu_{LR} \bar{f} \gamma_\mu \left[T_{3R} + \tan^2 \theta_W (g_L/g_R)^2 \, (T_{3L} - Q) \right] f$$

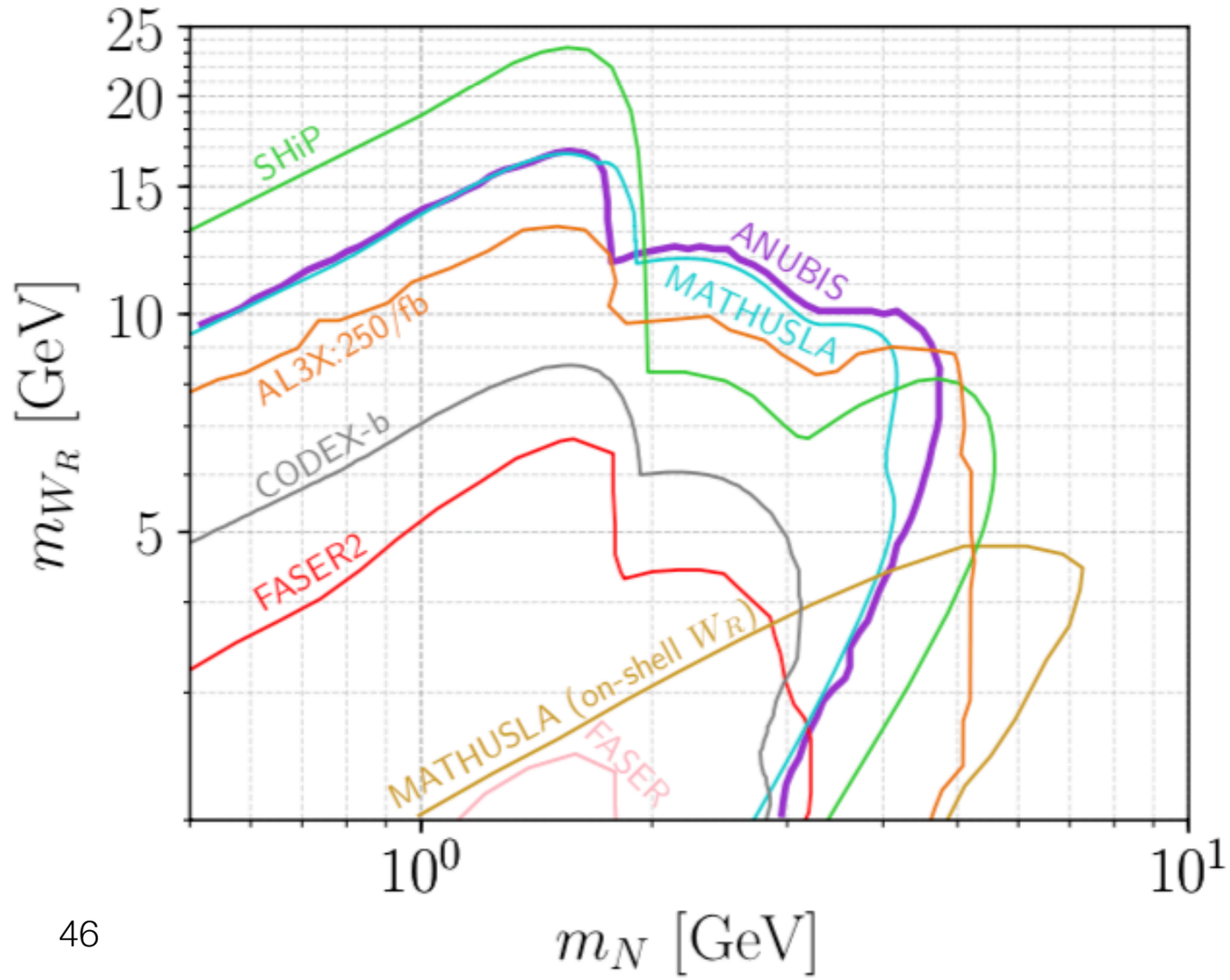

ANUBIS - other backgrounds

- Background from cosmic ray muons negligible:
  veto using timing and directional requirements

- Non-collision backgrounds negligible:
  ANUBIS is ~orthogonal to the beam line, while non-collision backgrounds feature a pronounced boost along the beam line

- Background from thermal neutrons decays negligible:
  too little energy

- Once >2 tracks required for the displaced vertex, any residual backgrounds from n, KL are rendered negligible

- Certainly background-free when 2 displaced vertices required:
  - one within ANUBIS for triggering
  - one can be in ANUBIS or anywhere in ATLAS

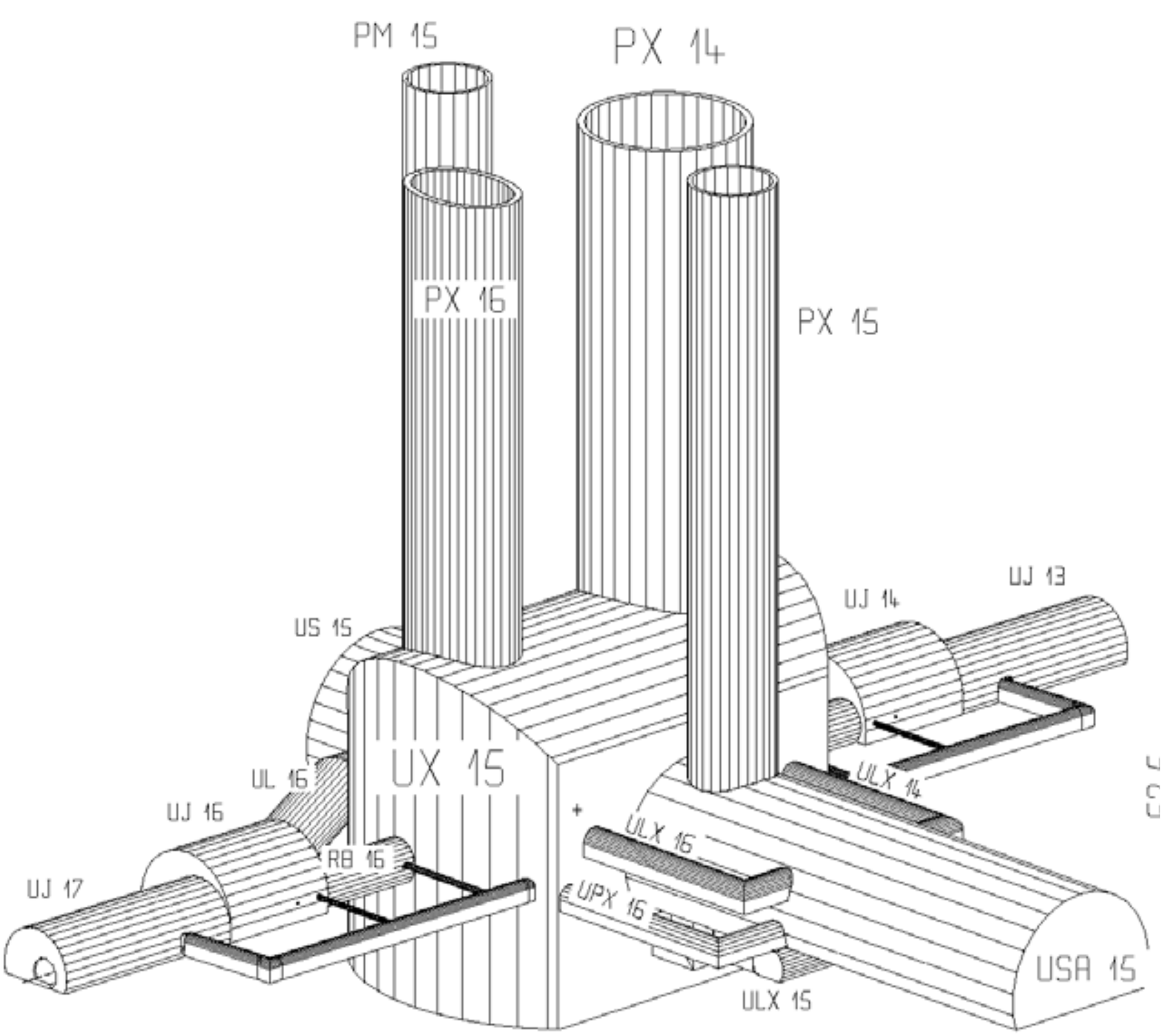
PM 15
PX 14
PX 16
PX 15
UJ 13
UJ 14
US 15
UX 15
UL 16
UJ 16
RB 16
UJ 17
ULX 14
ULX 16
UPX 16
ULX 15
USA 15

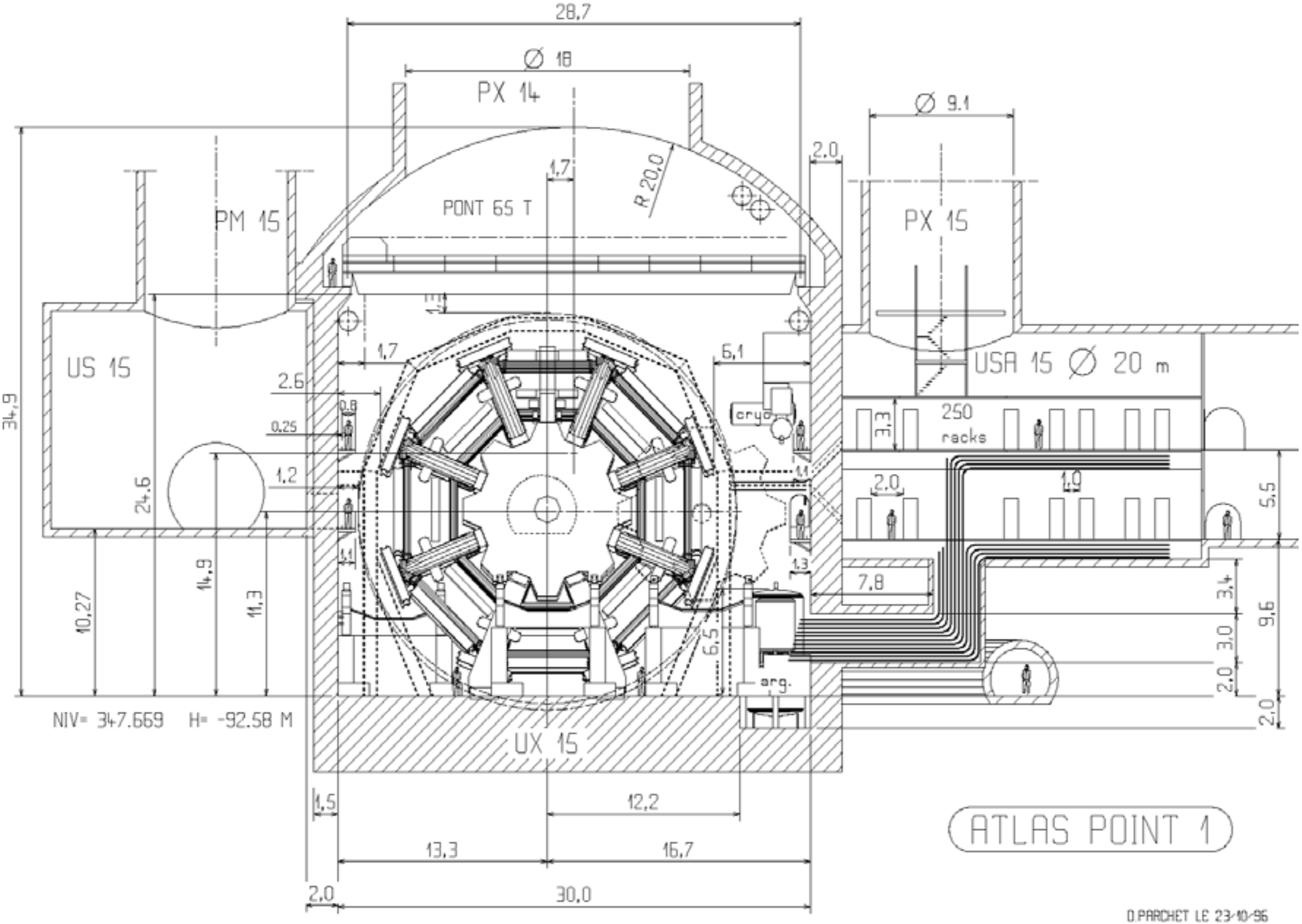
28,7
Ø 18
PX 14
Ø 9.1
2.0
1,7
R 20,0
PONT 65 T
PM 15
PX 15
US 15
USA 15 Ø 20 m
1,7
6,1
2.6
0.8
0.25
cryo
3,3
250
racks
34,9
1,2
24.6
2.0
1.0
5,5
1,1
1,3
7,8
3,4
9,6
10,27
14,9
11,3
6,5
3,0
2,0
2,0
arg.
NIV= 347.669 H= -92.58 M
UX 15
1,5
12,2
13,3
16,7
2,0
30,0
ATLAS POINT 1
D.PARCHET LE 23/10/96
AT130134PL
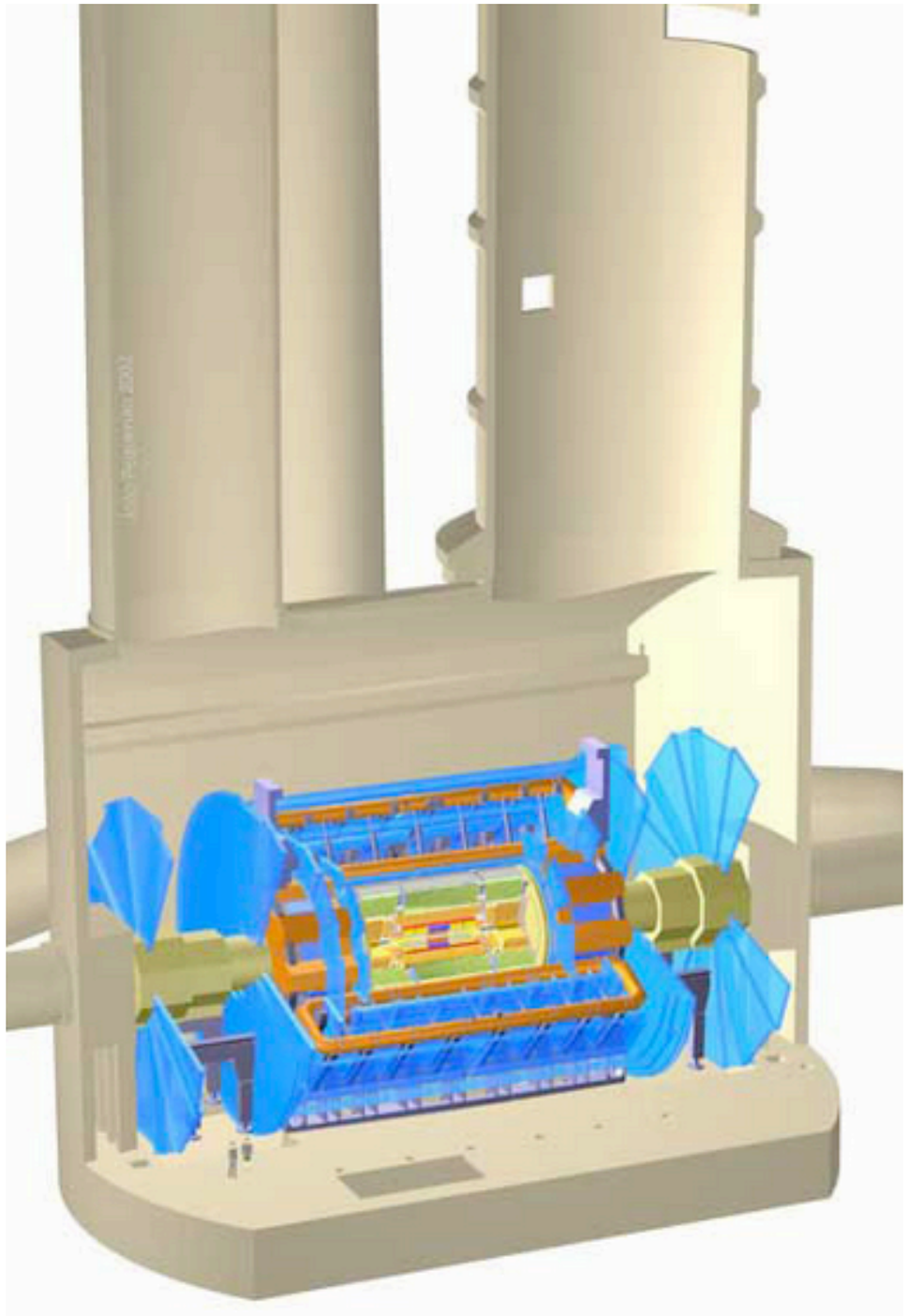
- Narrow gap (~1mm) RPCs with 1.27-mm-pitch long strips reading from both strip ends give:
  - » Precision coordinate: <220 μm spatial resolution using charge centroid;
    <300 μm only using signal arrival time information
    (could be used for fast tracking at trigger level).
  - » Non-precision coordinate: ~7 mm using 100 ps TDCs
  - » High Efficiency: >97%
  - » Time resolution: <500 ps
- Excellent timing performance would allow to do fast coincidence within few ns between contiguous detectors and to be used for Time of Flight measurements
- O(sub-mm x cm x sub-ns) virtual trigger cells created will be powerful to remove uncorrelated backgrounds as soon and as much as possible.